Features

- 1620UT SSG is a high thermal performance, structural silicone glazed curtain wall system
- Innovative design delivers high thermal performance while leveraging 1600 Wall System architecture
- 1620UT SSG has a 2" narrow (50.8) sightline
- Standard infill options 1/4" (6.4), 1" (25.4), and 1-3/4" (44.5)
- Standard 6" (152.4) or 7-1/2" (190.5) depth systems for double glazed 1" (25.4) infill and 6-3/4" (171.5) or 8-1/4" (209.6) depth for triple glazed 1-3/4" (44.5) infill
- Thermally Broken by means of a continuous 1" (25.4) low conductance engineered polymer
- Comprehensively tested to high performance air, water, structural, seismic, thermal, and acoustical standards
- Concealed fastener joinery creates smooth, monolithic appearance
- Open-back horizontals and perimeters are available for cost savings
- Shear block fabrication method
- Corner mullions and Splayed mullions
- Offers integrated entrance framing systems
- Silicone compatible glazing materials for long-lasting seals
- Two color option
- Permanodic® anodized finishes option
- Painted finishes in standard and custom choices

Optional Features

- Steel reinforcing
- Rain screen and backpans
- Deep covers
- Fiberglass pressure plates
- Heavy-weight mullions
- Profit$Maker® Plus die sets

Product Applications

- Ideal for low to mid-rise applications where high performance is desired

For specific product applications,
consult your Kawneer representative.

Architects – Most extrusion and window types illustrated in this catalog are standard products for Kawneer. These concepts have been expanded and modified to afford you design freedom. Some miscellaneous details are non-standard and are intended to demonstrate how the system can be modified to expand design flexibility. Please contact your Kawneer representative for further assistance.

Metric (SI) conversion figures are included throughout these details for reference. Numbers in parentheses ( ) are millimeters unless otherwise noted.

The following metric (SI) units are found in these details:

m – meter
cm – centimeter
mm – millimeter
s – second
Pa – pascal
MPa – megapascal

1620UT SSG Curtain Wall System

PICTORIAL VIEW

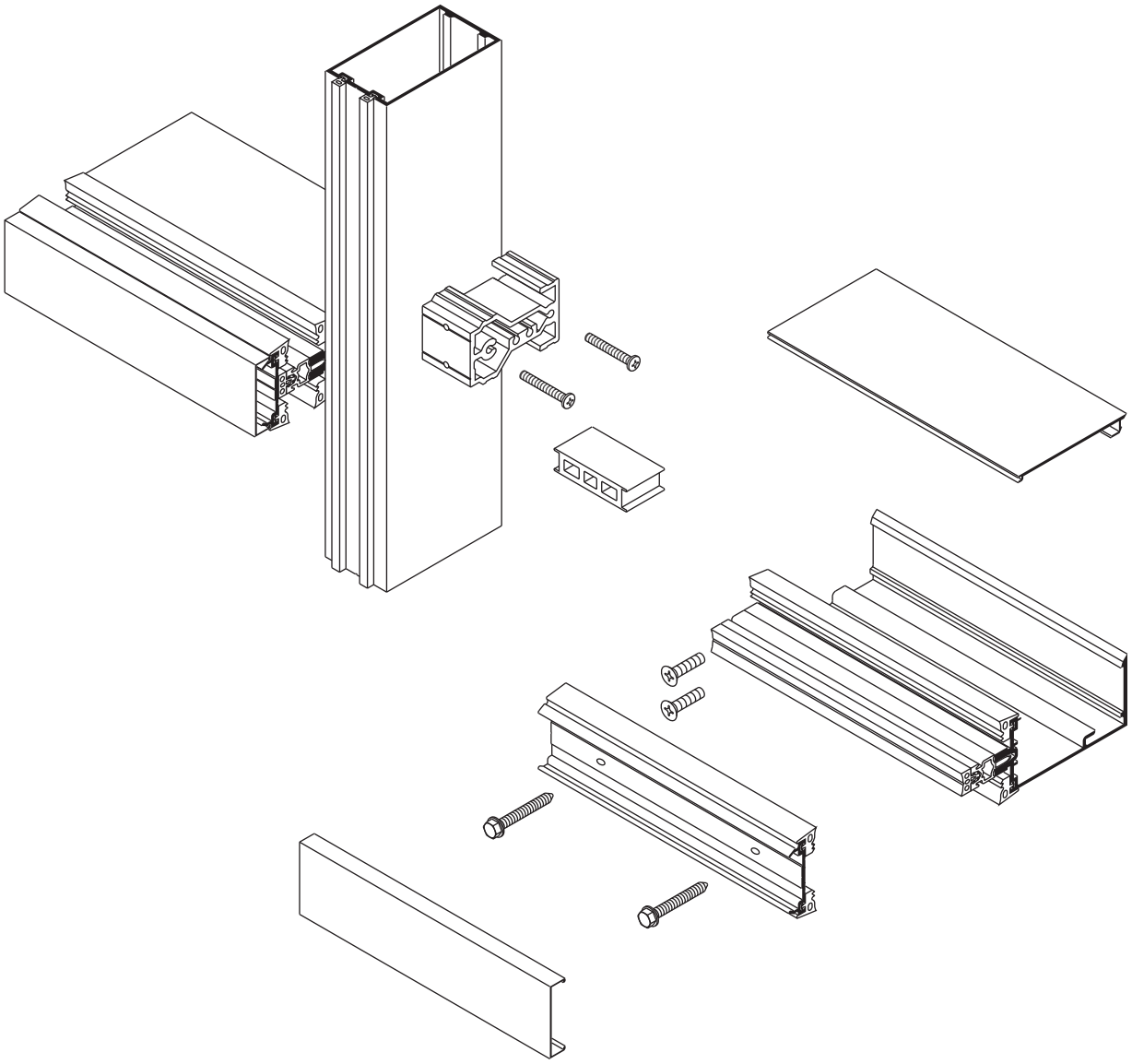

1620UT SSG Curtain Wall System

JANUARY, 2023

1" INFILL DETAILS

EC 97911-281

Additional information and CAD details are available at www.kawneer.com

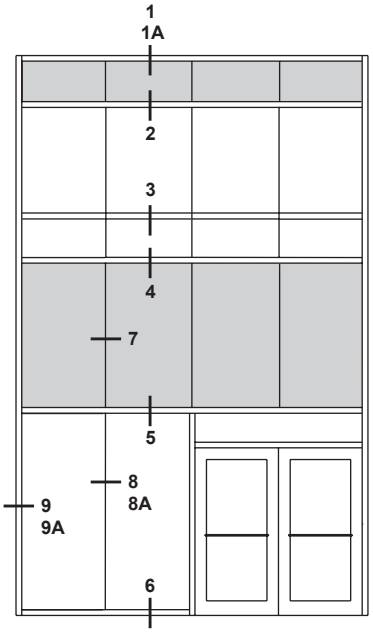

ELEVATION IS NUMBER KEYED TO DETAILS

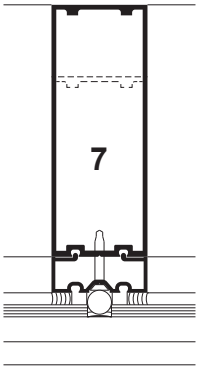

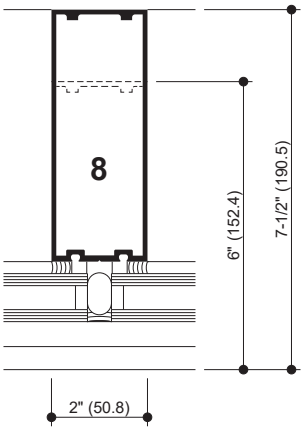

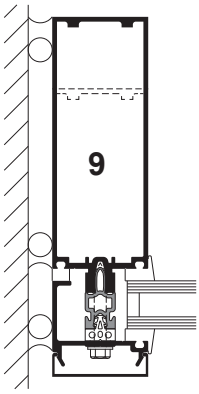

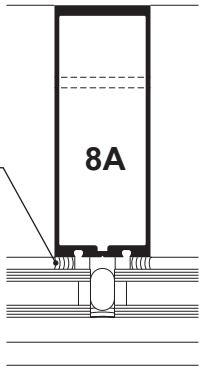

Structural Silicone Sealant
(by Others)*

HEAVY VERTICAL
MULLION

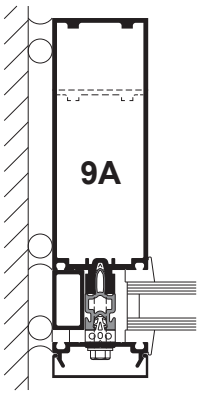

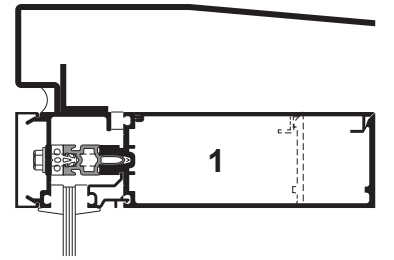

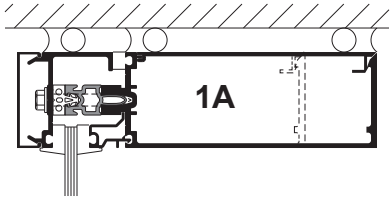

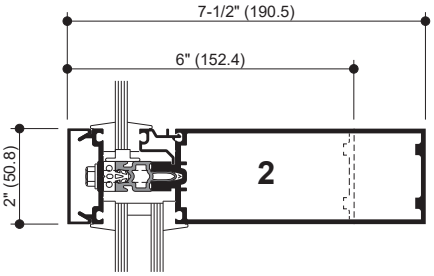

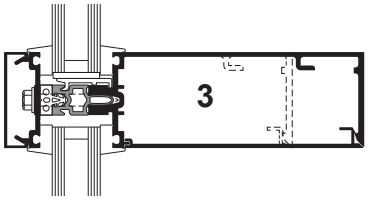

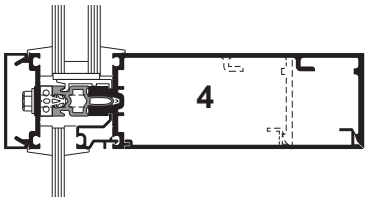

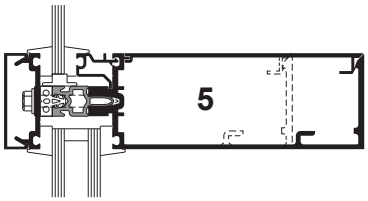

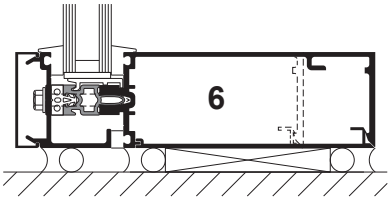

*** INSTALLER NOTE:** Installer is responsible for all required compatibility review and approvals with the Structural Silicone Manufacturer and the Insulating Glass Unit Manufacturer.

Additional information and CAD details are available at www.kawneer.com

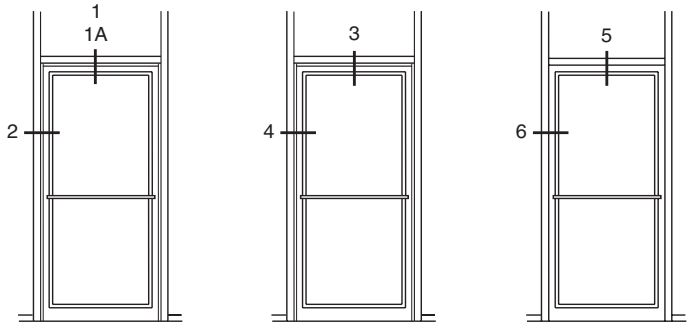

B/H OR O/P **C/H** **B/H OR O/P**

ELEVATION IS NUMBER KEYED TO DETAILS

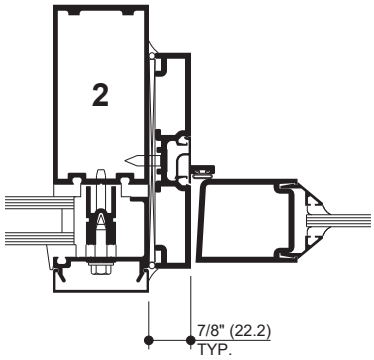

DOOR JAMB
BUTT HUNG OR OFFSET PIVOT

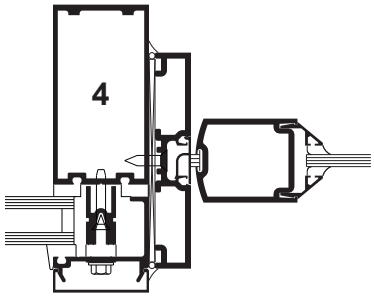

DOOR JAMB
CENTER HUNG

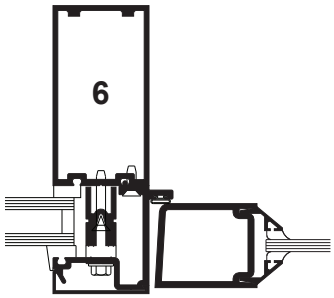

DOOR JAMB
BUTT HUNG OR OFFSET PIVOT

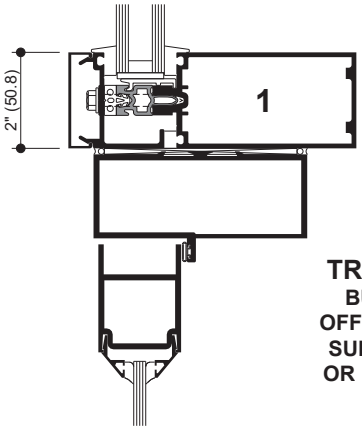

TRANSOM BAR
BUTT HUNG OR OFFSET PIVOT WITH SURFACE CLOSER OR FLOOR CLOSER

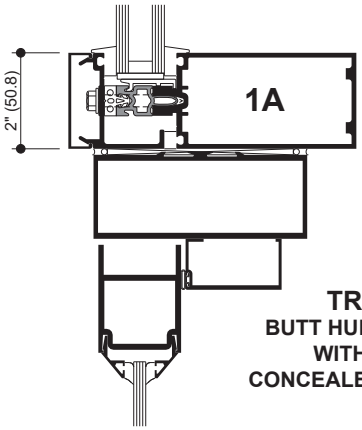

TRANSOM BAR
BUTT HUNG OR OFFSET PIVOT WITH SINGLE ACTING CONCEALED OVERHEAD CLOSER

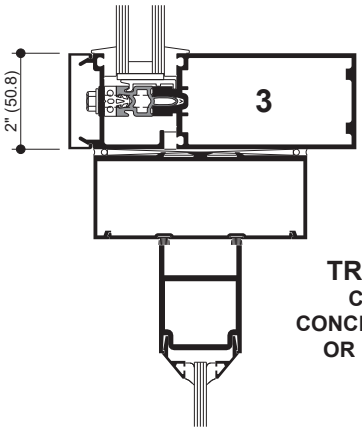

TRANSOM BAR
CENTER HUNG CONCEALED OVERHEAD OR FLOOR CLOSER

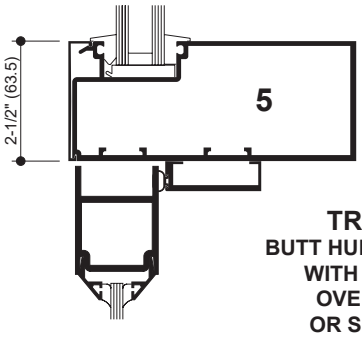

TRANSOM BAR
BUTT HUNG OR OFFSET PIVOT WITH LCN CONCEALED OVER HEAD CLOSER OR SURFACE CLOSER

1620UT SSG Curtain Wall System

JANUARY, 2023

THERMAL ENTRANCE DETAILS (1" INFILL)

EC 97911-281

Additional information and CAD details are available at www.kawneer.com

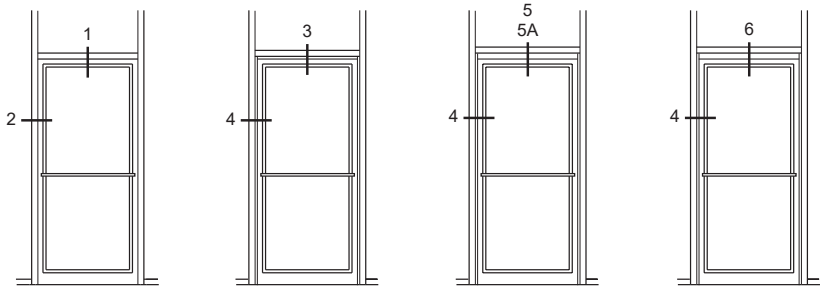

B/H OR O/P

ELEVATION IS NUMBER KEYED TO DETAILS

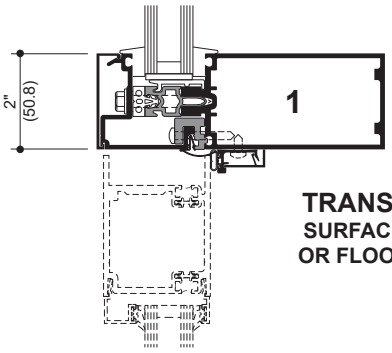

TRANSOM BAR
SURFACE CLOSER
OR FLOOR CLOSER

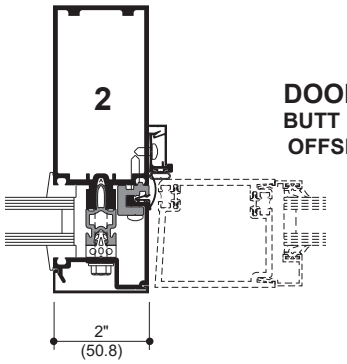

DOOR JAMB
BUTT HUNG OR
OFFSET PIVOT

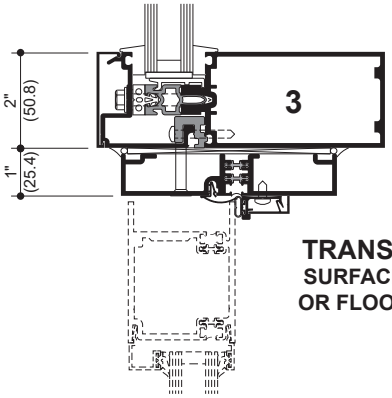

TRANSOM BAR
SURFACE CLOSER
OR FLOOR CLOSER

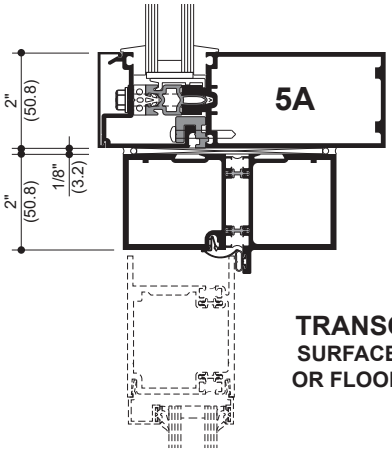

TRANSOM BAR
SURFACE CLOSER
OR FLOOR CLOSER

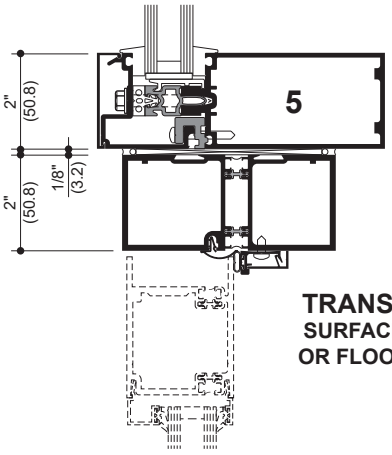

TRANSOM BAR
SURFACE CLOSER
OR FLOOR CLOSER

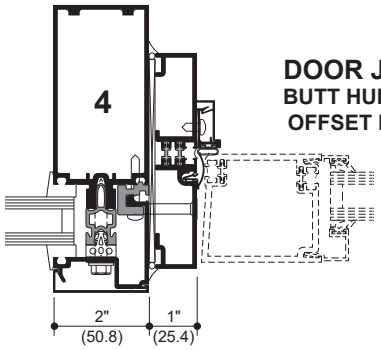

DOOR JAMB
BUTT HUNG OR
OFFSET PIVOT

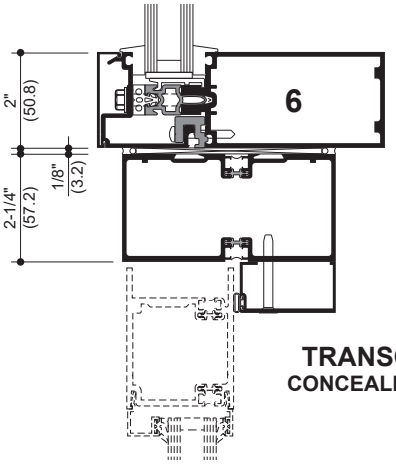

TRANSOM BAR
CONCEALED CLOSER

Additional information and CAD details are available at www.kawneer.com

NOTE: 6" SYSTEM SHOWN, 7-1/2" SYSTEM SIMILAR.

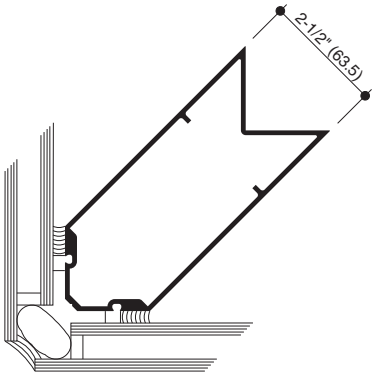

90° OUTSIDE CORNER

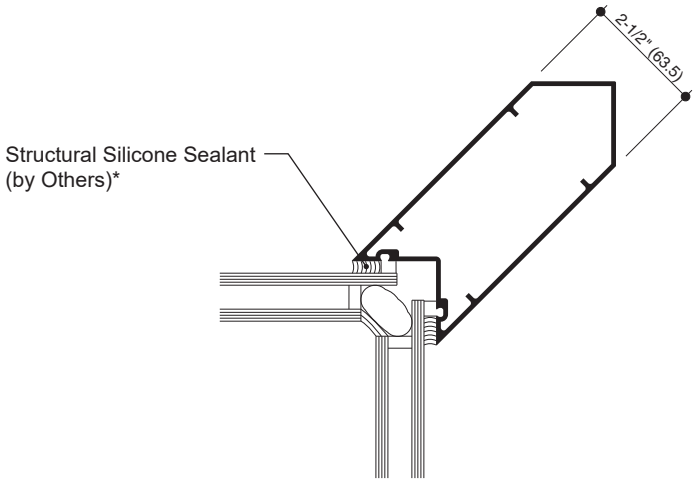

90° INSIDE CORNER

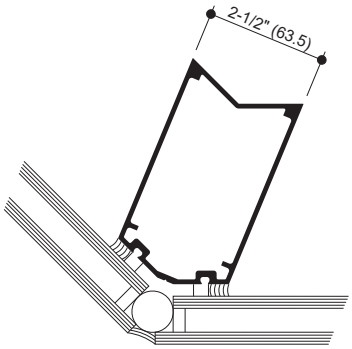

135° OUTSIDE CORNER

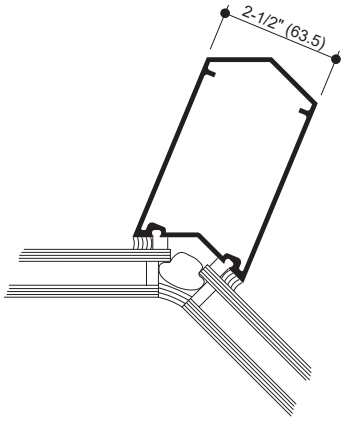

135° INSIDE CORNER

*** INSTALLER NOTE:** Installer is responsible for all required compatibility review and approvals with the Structural Silicone Manufacturer and the Insulating Glass Unit Manufacturer.

Additional information and CAD details are available at www.kawneer.com

NOTE: 6" SYSTEM SHOWN, 7-1/2" SYSTEM SIMILAR.

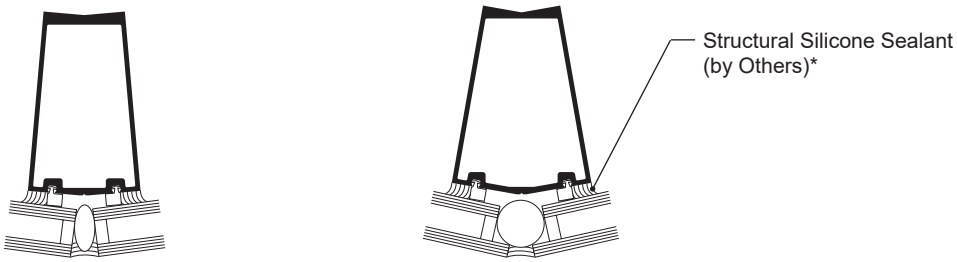

10° **20°**

OUTSIDE SPLAYED MULLIONS

10° **20°**

INSIDE SPLAYED MULLIONS

OTHER SPLAY OPTIONS AVAILABLE

*** INSTALLER NOTE:** Installer is responsible for all required compatibility review and approvals with the Structural Silicone Manufacturer and the Insulating Glass Unit Manufacturer.

Additional information and CAD details are available at www.kawneer.com

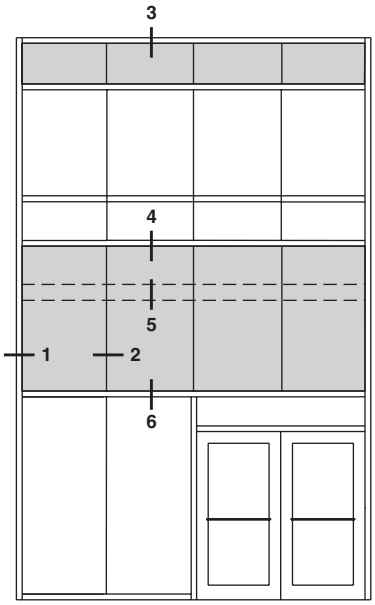

ELEVATION IS NUMBER KEYED TO DETAILS

NOTE: 6" SYSTEM SHOWN,
7-1/2" SYSTEM SIMILAR

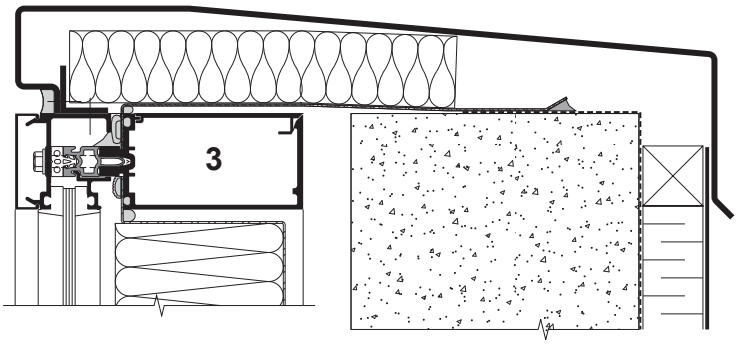

HEAD TRANSOM AT PARAPET FLASHING

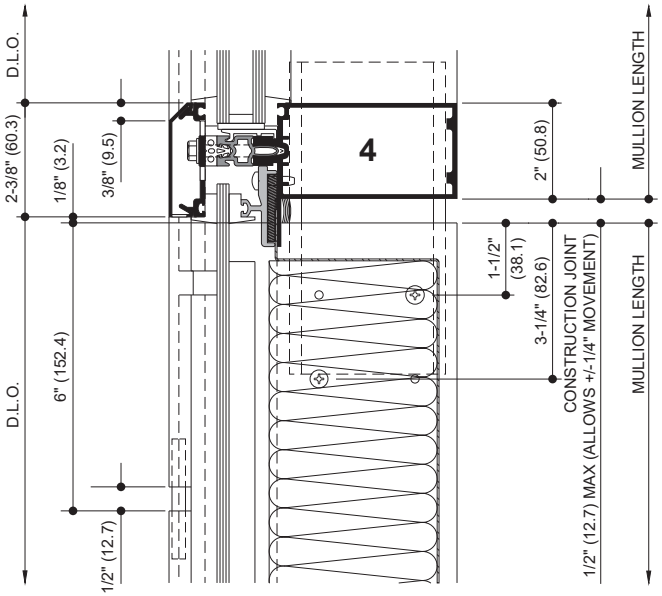

EXPANSION JOINT

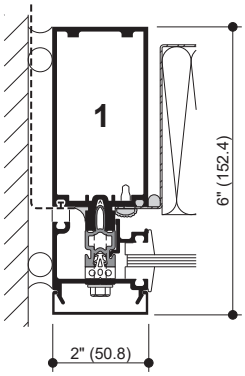

JAMB MULLION AT SPANDREL
(With vapor barrier tie-in)

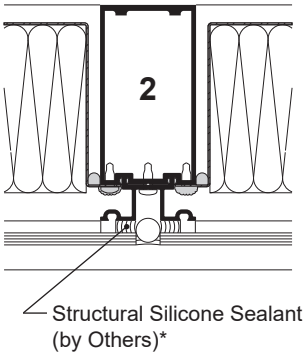

MULLION AT SPANDREL

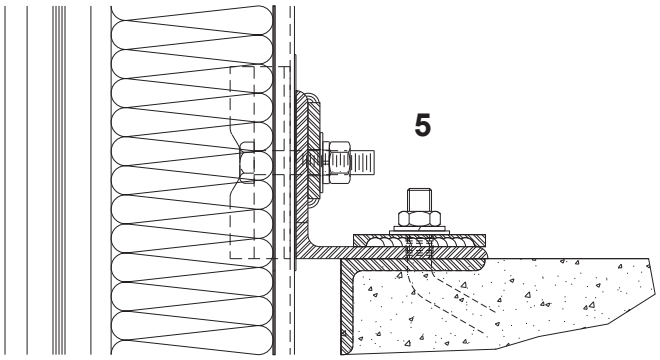

TYPICAL DEADLOAD ANCHOR

*** INSTALLER NOTE:** Installer is responsible for all required compatibility review and approvals with the Structural Silicone Manufacturer and the Insulating Glass Unit Manufacturer.

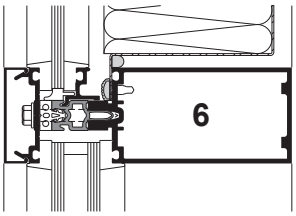

TRANSOM – SPANDREL OVER VISION

Additional information and CAD details are available at www.kawneer.com

Architects – Most extrusion and window types illustrated in this catalog are standard products for Kawneer. These concepts have been expanded and modified to afford you design freedom. Some miscellaneous details are non-standard and are intended to demonstrate how the system can be modified to expand design flexibility. Please contact your Kawneer representative for further assistance.

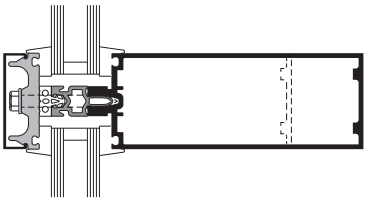

WITH FIBERGLASS PRESSURE PLATE

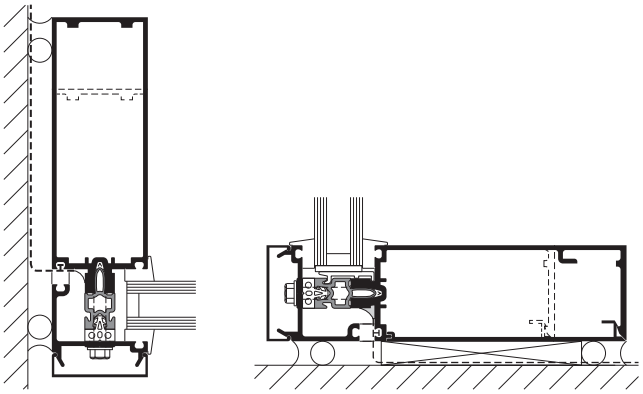

WITH VAPOR BARRIER TIE-IN

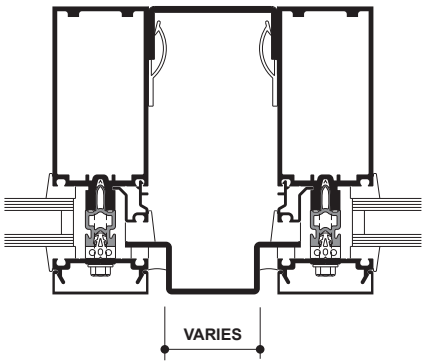

DOUBLE MULLION

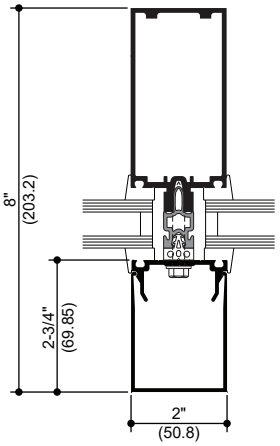

OPTIONAL MULLION OPTIONAL COVER

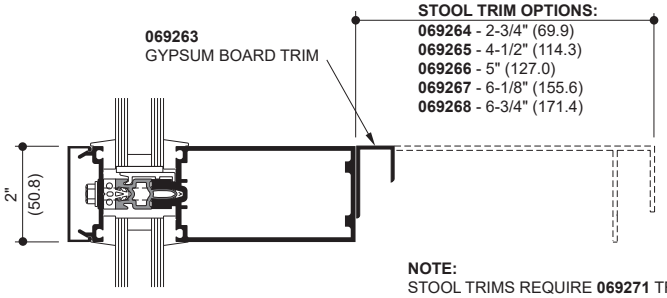

NOTE:
STOOL TRIMS REQUIRE **069271** TRIM CLIP PACKAGE

INTERIOR STOOL TRIM

Additional information and CAD details are available at www.kawneer.com

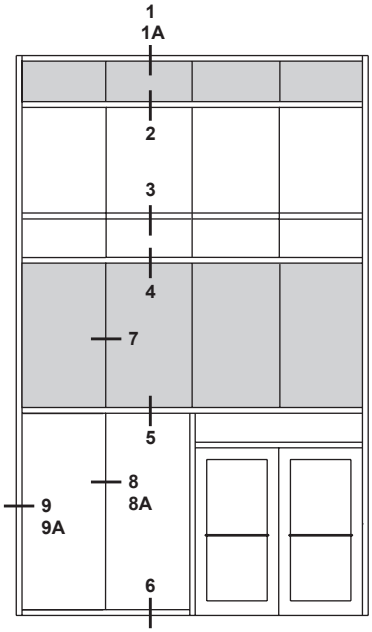

ELEVATION IS NUMBER KEYED TO DETAILS

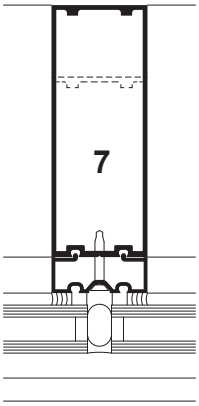

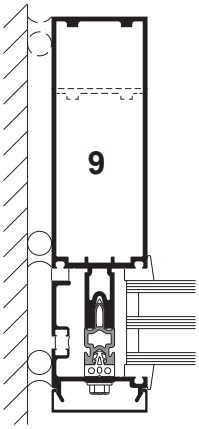

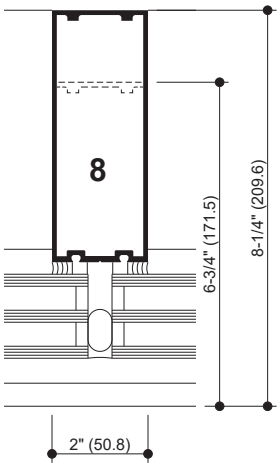

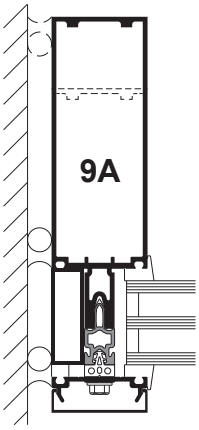

Structural Silicone Sealant
(by Others)*

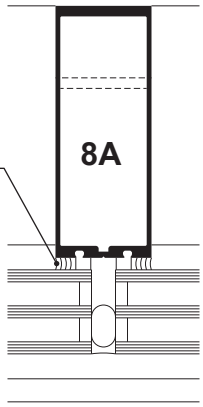

HEAVY VERTICAL
MULLION

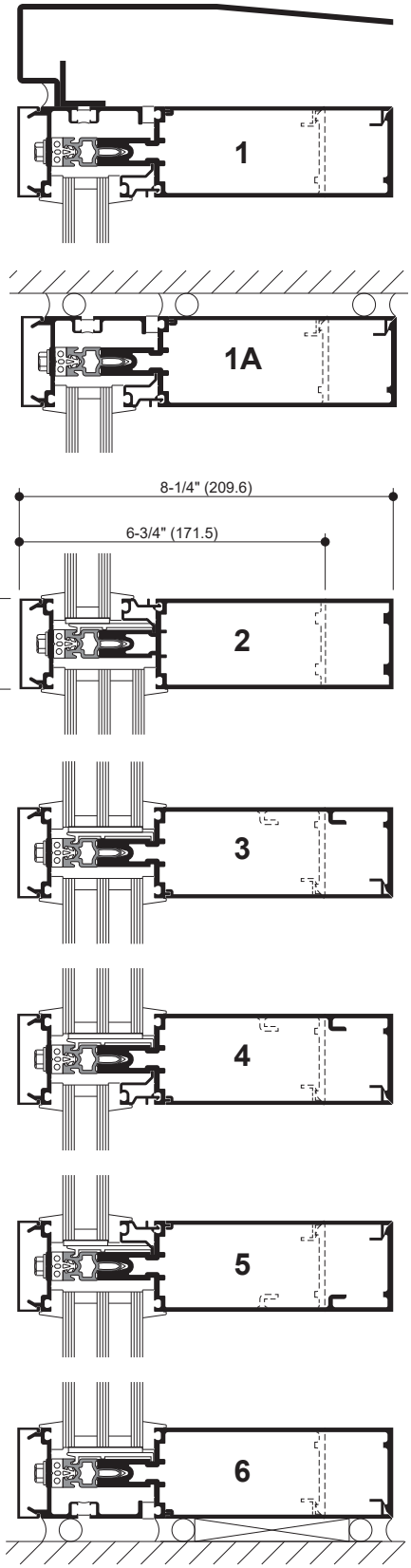

1620UT SSG Curtain Wall System

ENTRANCE DETAILS (1-3/4" INFILL)

EC 97911-281

Additional information and CAD details are available at www.kawneer.com

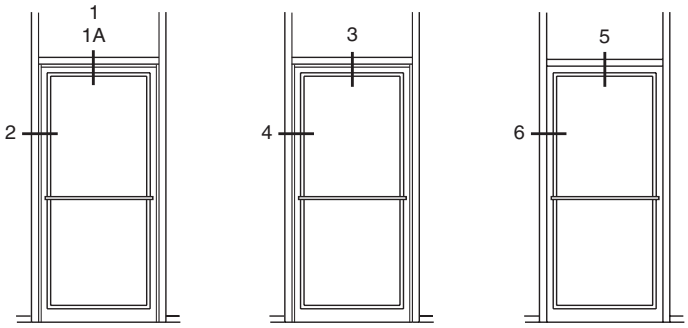

B/H OR O/P C/H B/H OR O/P

ELEVATION IS NUMBER KEYED TO DETAILS

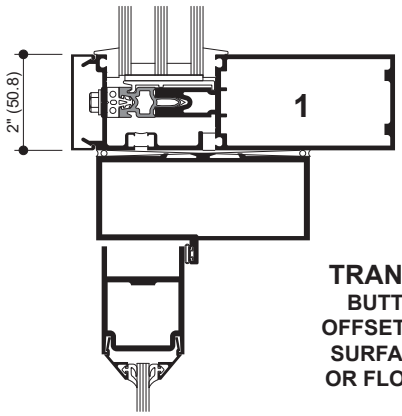

TRANSOM BAR
BUTT HUNG OR OFFSET PIVOT WITH SURFACE CLOSER OR FLOOR CLOSER

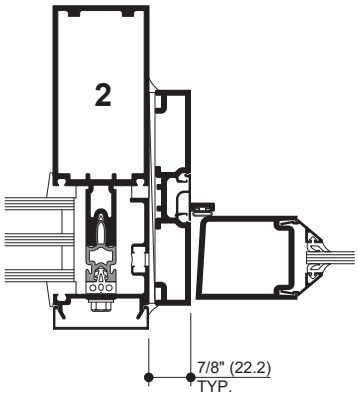

DOOR JAMB
BUTT HUNG OR OFFSET PIVOT

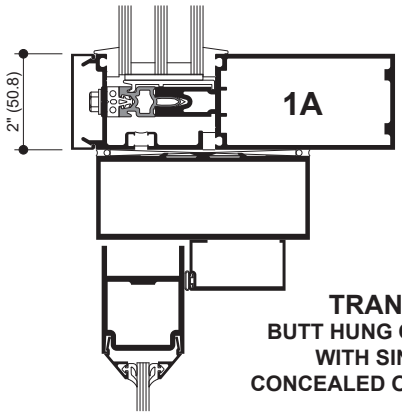

TRANSOM BAR
BUTT HUNG OR OFFSET PIVOT WITH SINGLE ACTING CONCEALED OVERHEAD CLOSER

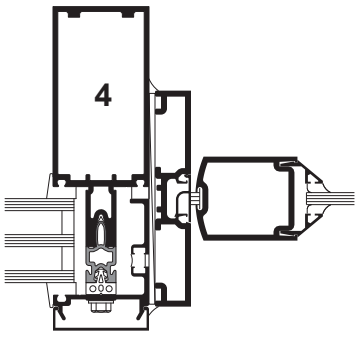

DOOR JAMB
CENTER HUNG

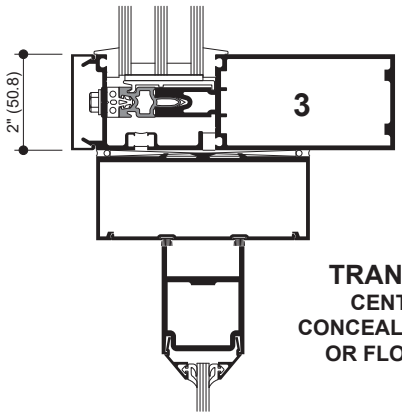

TRANSOM BAR
CENTER HUNG CONCEALED OVERHEAD OR FLOOR CLOSER

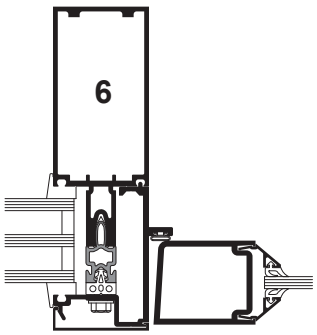

DOOR JAMB
BUTT HUNG OR OFFSET PIVOT

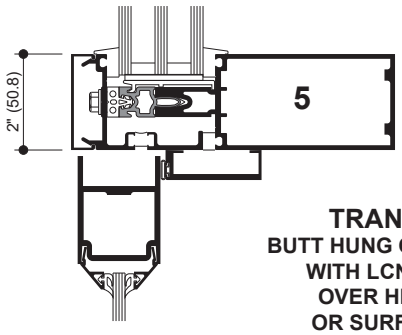

TRANSOM BAR
BUTT HUNG OR OFFSET PIVOT WITH LCN CONCEALED OVER HEAD CLOSER OR SURFACE CLOSER

Additional information and CAD details are available at www.kawneer.com

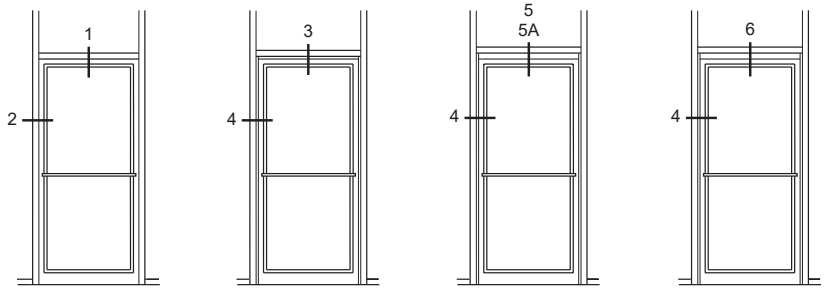

B/H OR O/P

ELEVATION IS NUMBER KEYED TO DETAILS

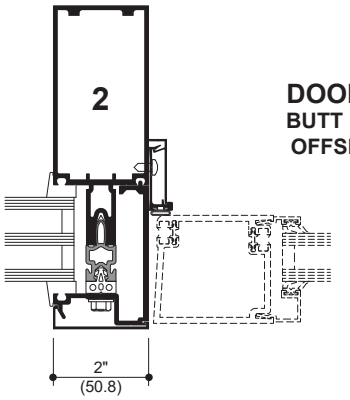

DOOR JAMB
BUTT HUNG OR OFFSET PIVOT

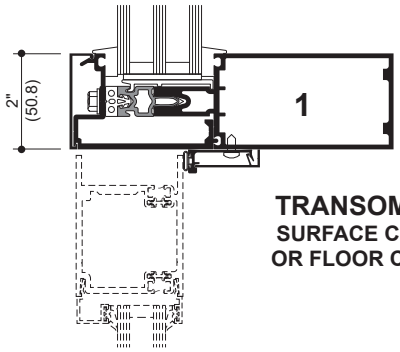

TRANSOM BAR
SURFACE CLOSER OR FLOOR CLOSER

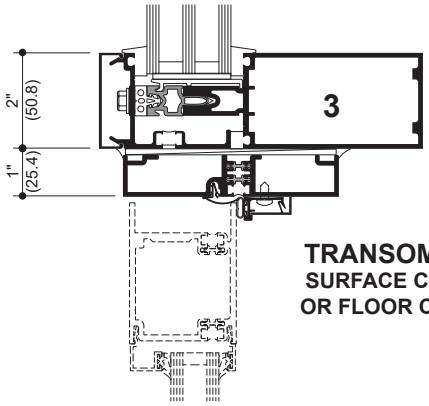

TRANSOM BAR
SURFACE CLOSER OR FLOOR CLOSER

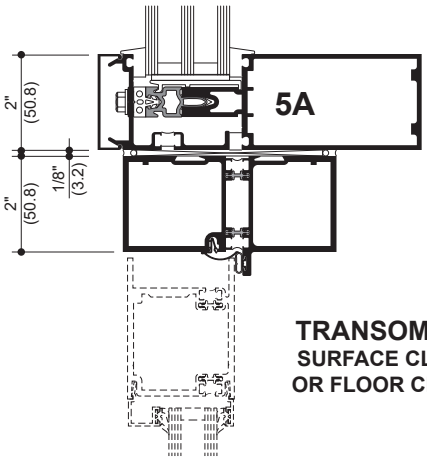

TRANSOM BAR
SURFACE CLOSER OR FLOOR CLOSER

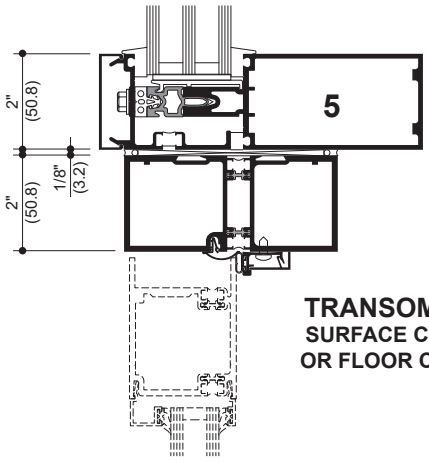

TRANSOM BAR
SURFACE CLOSER OR FLOOR CLOSER

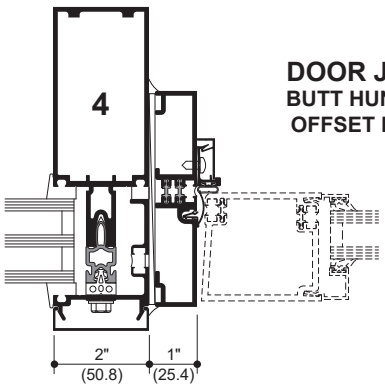

DOOR JAMB
BUTT HUNG OR OFFSET PIVOT

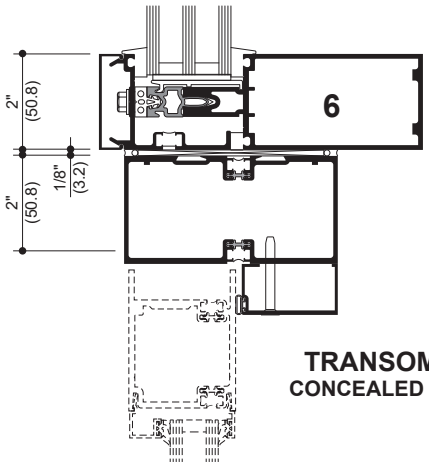

TRANSOM BAR
CONCEALED CLOSER

Additional information and CAD details are available at www.kawneer.com

NOTE: 6-3/4" SYSTEM SHOWN, 8-1/4" SYSTEM SIMILAR.

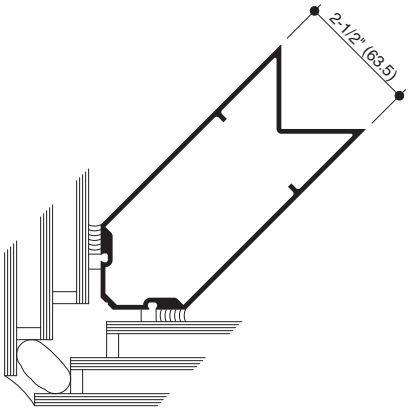

90° OUTSIDE CORNER

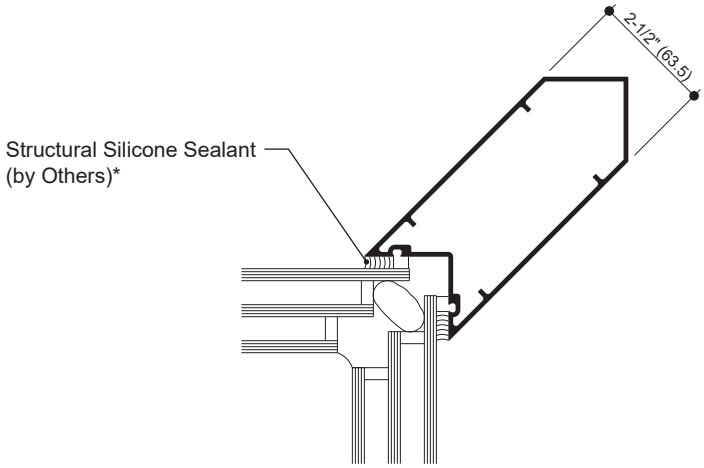

90° INSIDE CORNER

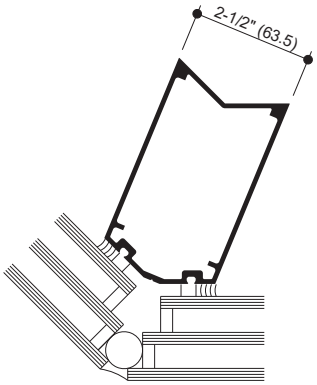

135° OUTSIDE CORNER

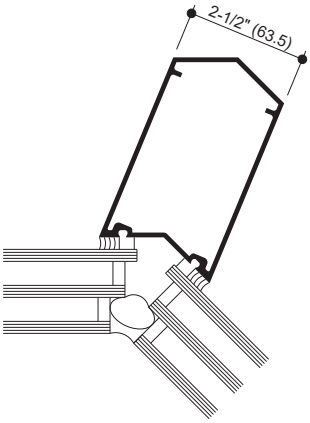

135° INSIDE CORNER

* **INSTALLER NOTE:** Installer is responsible for all required compatibility review and approvals with the Structural Silicone Manufacturer and the Insulating Glass Unit Manufacturer.

Additional information and CAD details are available at www.kawneer.com

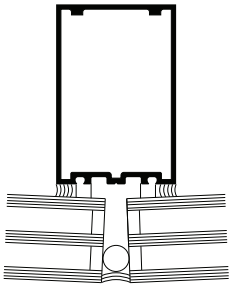

0° TO 5°

OUTSIDE SPLAYED MULLIONS

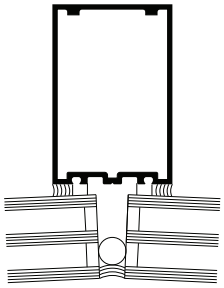

0° TO 5°

INSIDE SPLAYED MULLIONS

OTHER SPLAY OPTIONS AVAILABLE

Additional information and CAD details are available at www.kawneer.com

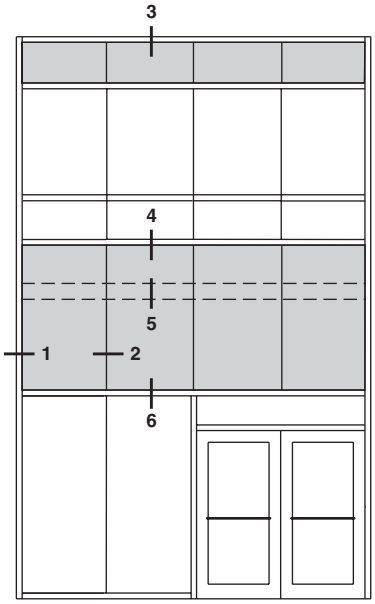

ELEVATION IS NUMBER KEYED TO DETAILS

NOTE: 6-3/4" SYSTEM SHOWN,
8-1/4" SYSTEM SIMILAR

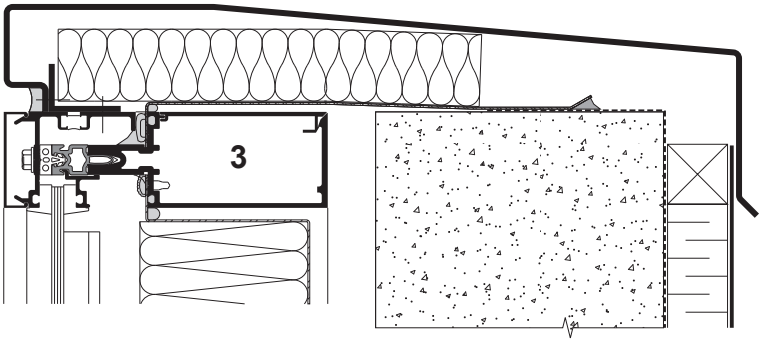

HEAD TRANSOM AT PARAPET FLASHING

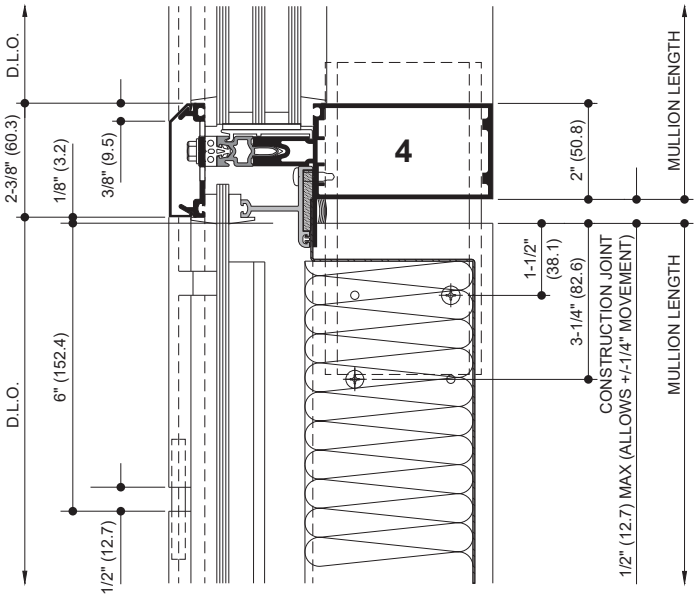

EXPANSION JOINT

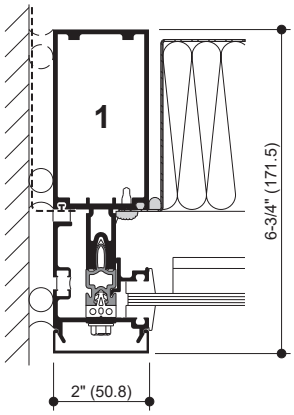

JAMB MULLION AT SPANDREL
(With vapor barrier tie-in)

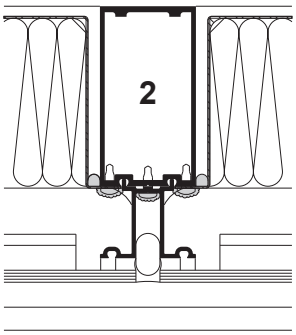

MULLION AT SPANDREL

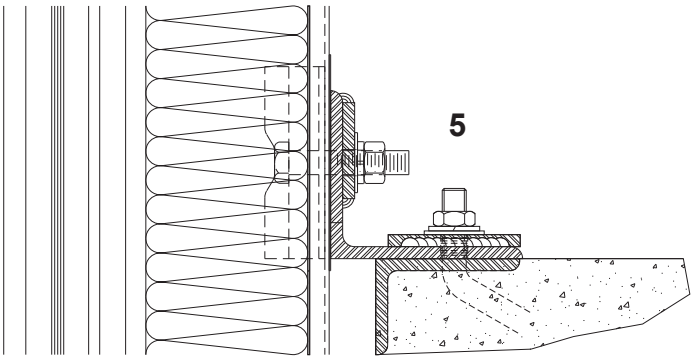

TYPICAL DEADLOAD ANCHOR

TRANSOM – SPANDREL OVER VISION

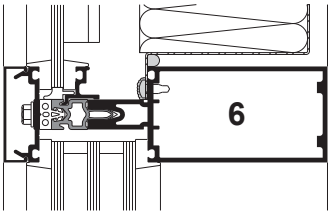

Additional information and CAD details are available at www.kawneer.com

Architects – Most extrusion and window types illustrated in this catalog are standard products for Kawneer. These concepts have been expanded and modified to afford you design freedom. Some miscellaneous details are non-standard and are intended to demonstrate how the system can be modified to expand design flexibility. Please contact your Kawneer representative for further assistance.

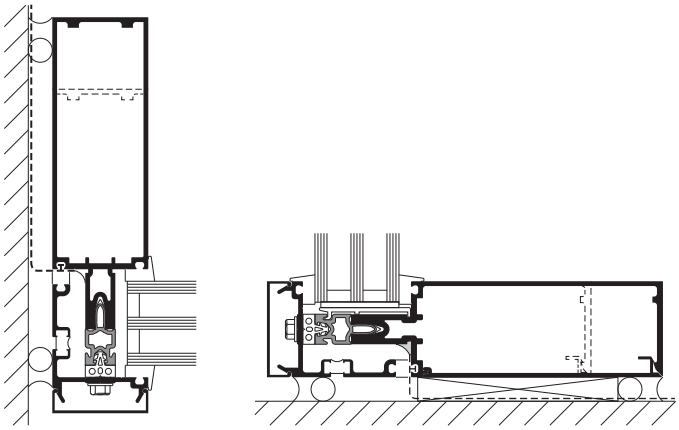

WITH VAPOR BARRIER TIE-IN

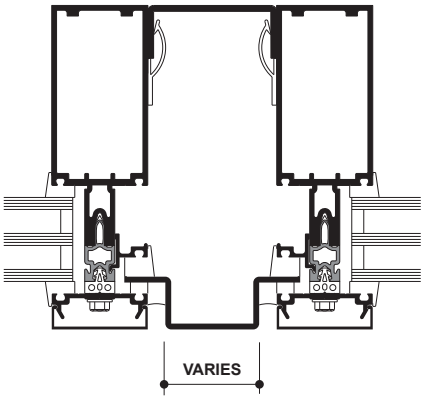

DOUBLE MULLION

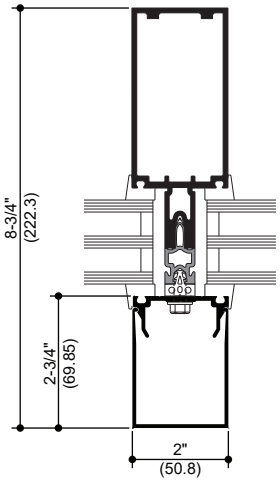

OPTIONAL MULLION
OPTIONAL COVER

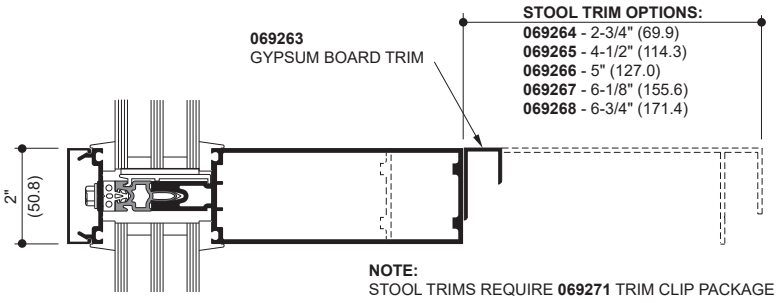

INTERIOR STOOL TRIM

Actual project conditions will determine specific anchor design. Details on this page are for reference only.
Note: 6" system shown, 7-1/2", 6-3/4" and 8-1/4" systems similar. Covers all glazing infills.

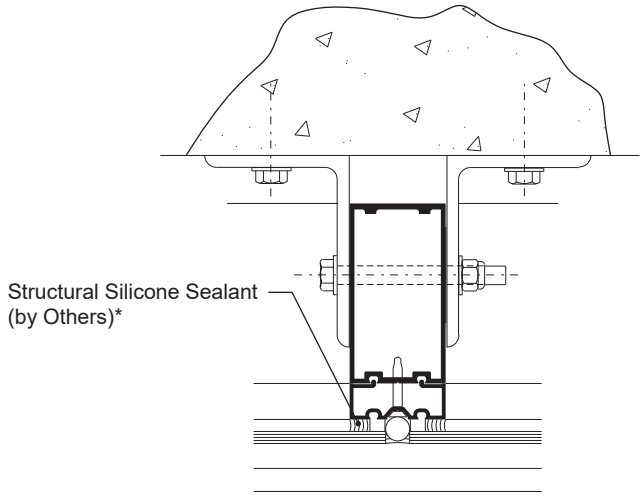

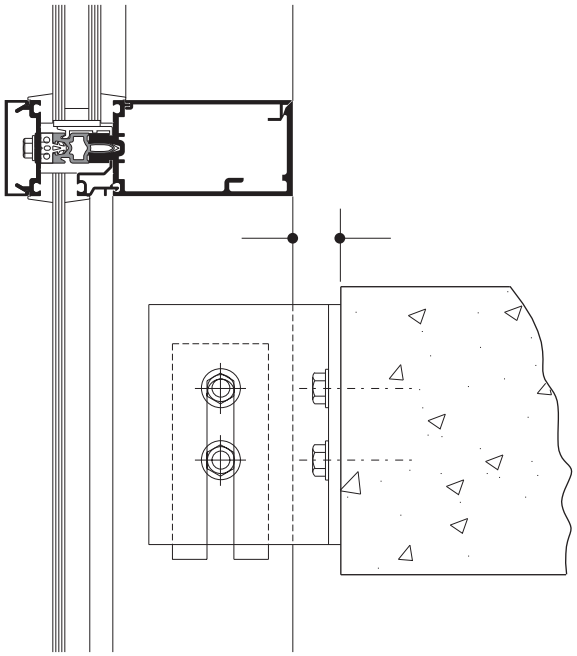

ANCHORING TO FLOOR SLAB

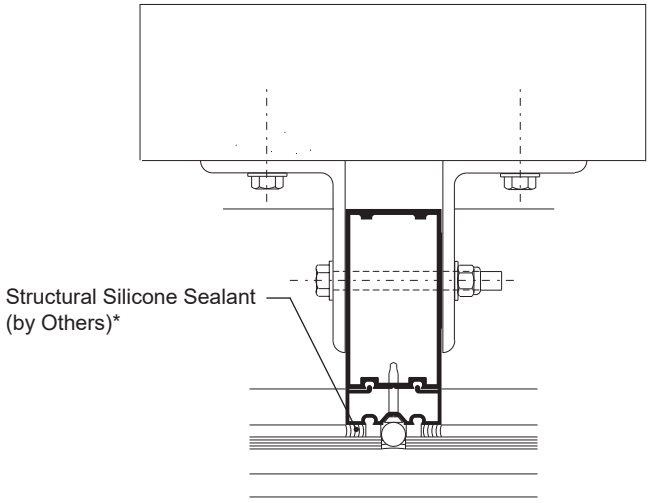

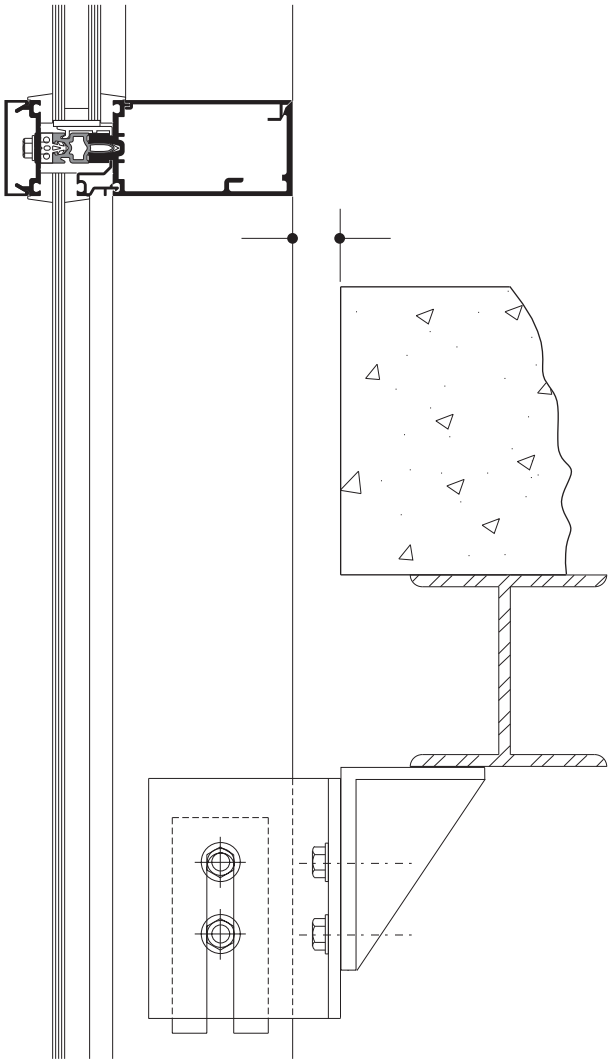

ANCHORING TO SUPPORT STEEL

*** INSTALLER NOTE:** Installer is responsible for all required compatibility review and approvals with the Structural Silicone Manufacturer and the Insulating Glass Unit Manufacturer.

Actual project conditions will determine specific anchor design. Details on this page are for reference only.
Note: 6" system shown, 7-1/2", 6-3/4" and 8-1/4" systems similar. Covers all glazing infills.

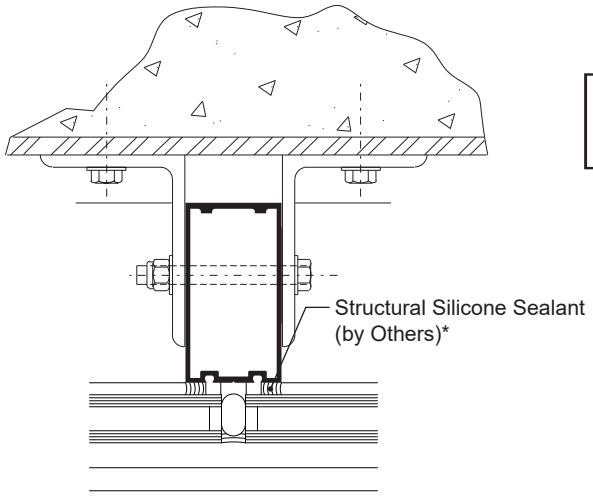

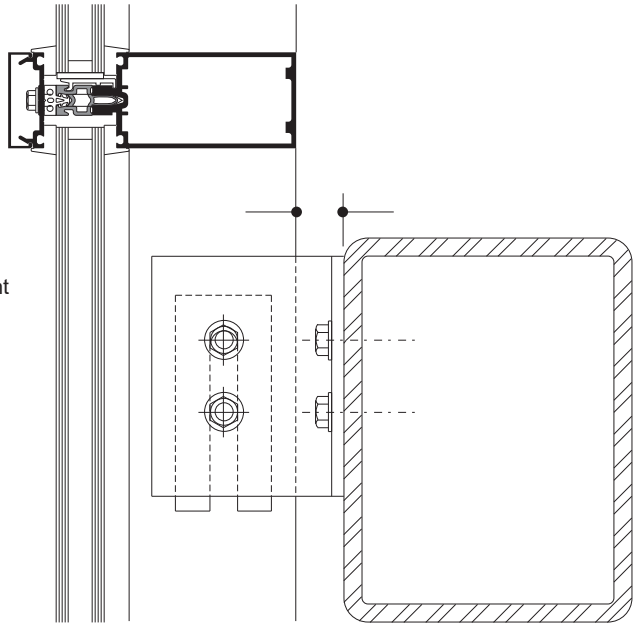

ANCHORING TO HORIZONTAL STRUCTURAL STEEL

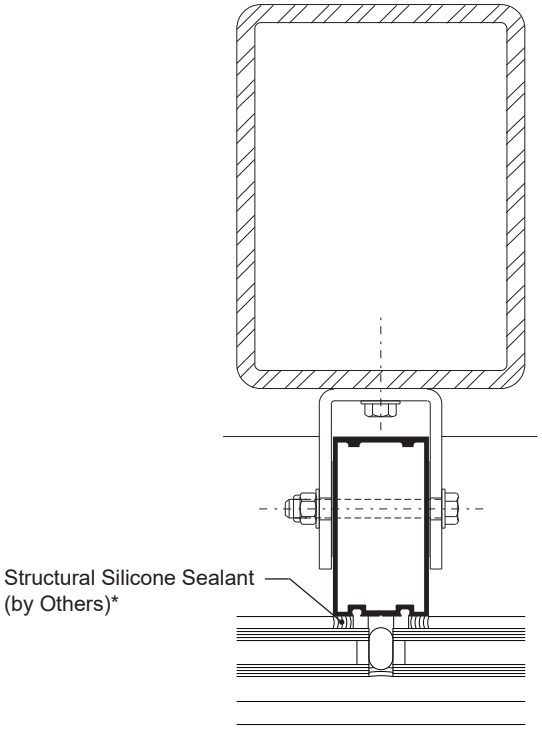

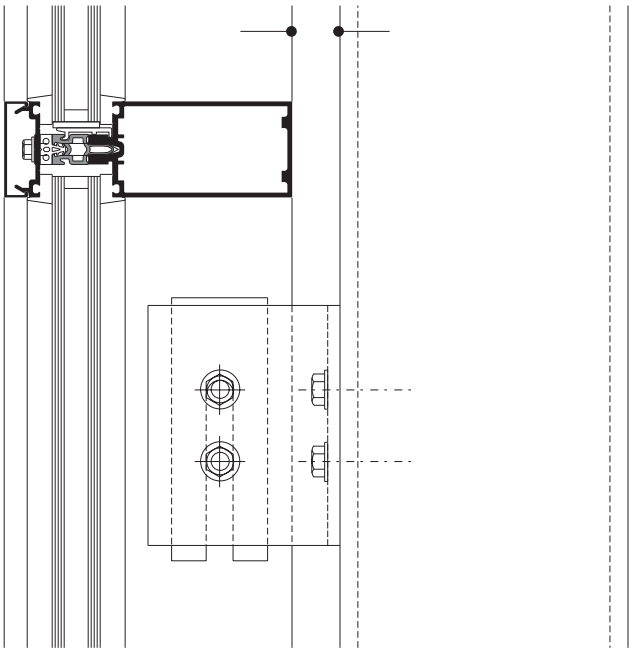

ANCHORING TO VERTICAL STRUCTURAL STEEL

*** INSTALLER NOTE:** Installer is responsible for all required compatibility review and approvals with the Structural Silicone Manufacturer and the Insulating Glass Unit Manufacturer.

WIND LOAD CHARTS

Mullions are designed for deflection limitations in accordance with AAMA TIR-A11 of L/175 up to 13' 6" and L/240 +1/4" above 13' 6". These curves are for mullions WITH HORIZONTALS and are based on engineering calculations for stress and deflection. Allowable wind load stress for ALUMINUM 15,152 psi (104 MPa), STEEL 30,000 psi (207 MPa). Charted curves, in all cases are for the limiting value. Wind load charts contained herein are based upon nominal wind load utilized in allowable stress design. A conversion from Load Resistance Factor Design (LRFD) is provided. To convert ultimate wind loads to nominal loads, multiply ultimate wind loads by a factor of 0.6 per ASCE/SEI 7. A 4/3 increase in allowable stress has not been used to develop these curves. For special situations not covered by these curves, contact your Kawneer representative for additional information.

DEADLOAD CHARTS

Horizontal or deadload limitations are based upon 1/8" (3.2), maximum allowable deflection at the center of an intermediate horizontal member. The accompanying charts are calculated for 1" (25.4) thick insulating glass or 1/4" (6.4) thick glass supported on two setting blocks placed at the loading points shown.

	Allowable Stress Design Load	LRFD Ultimate Design Load
A =	20 PSF (960)	33 PSF (1580)
B =	30 PSF (1440)	50 PSF (2400)
C =	40 PSF (1920)	67 PSF (3200)
D =	50 PSF (2400)	83 PSF (4000)
E =	60 PSF (2880)	100 PSF (4790)

SINGLE SPAN

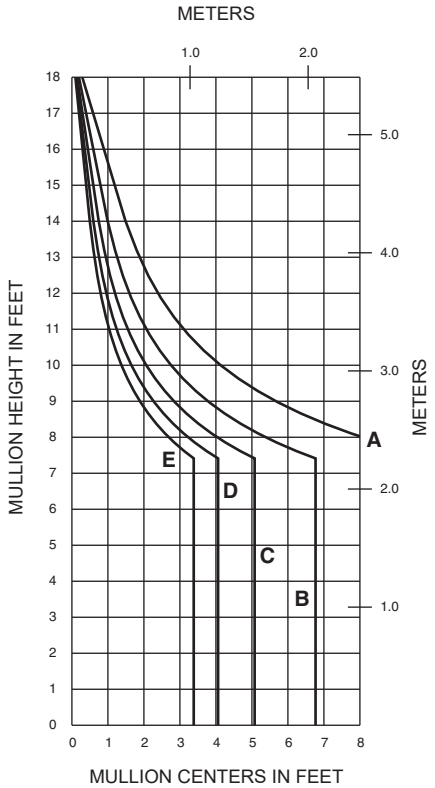

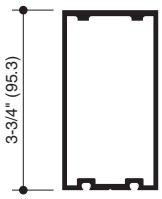

178023

I = 2.712(112.88 x 10^4)
S = 1.416(23.2 x 10^3)

TWIN SPAN

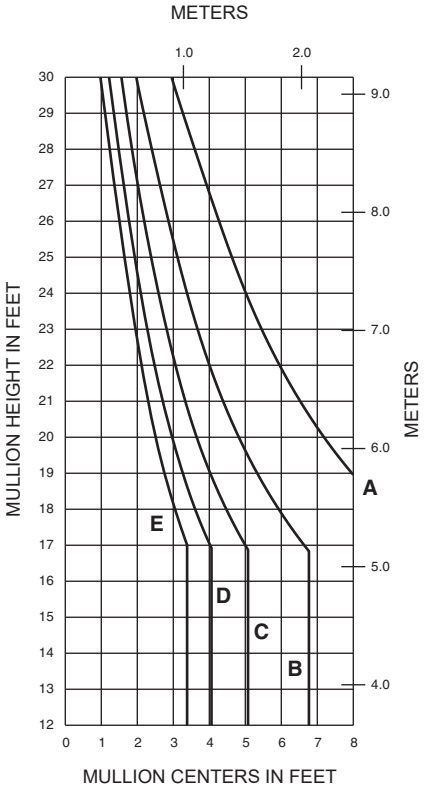

SINGLE SPAN

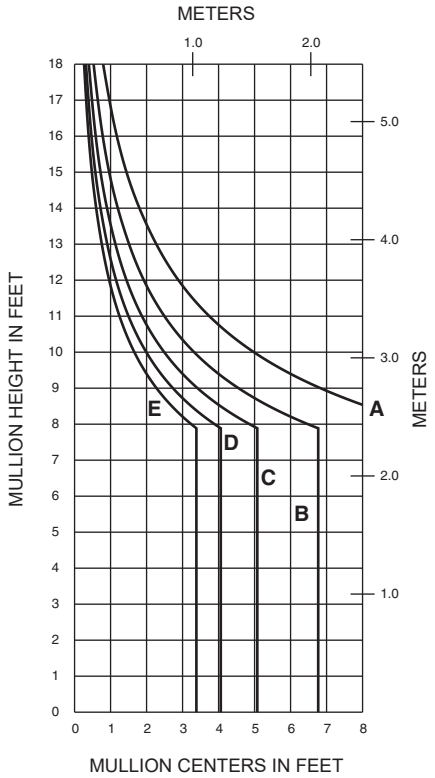

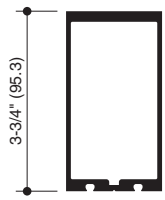

178024

I = 3.260(135.69 x 10^4)
S = 1.712(28.05 x 10^3)

TWIN SPAN

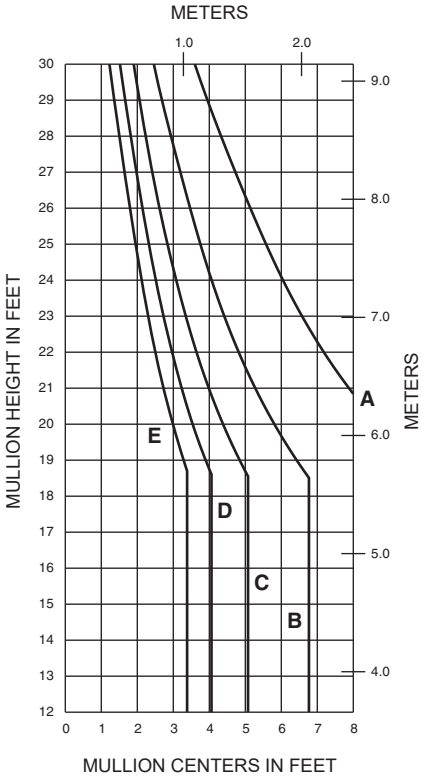

	Allowable Stress Design Load	LRFD Ultimate Design Load
A =	20 PSF (960)	33 PSF (1580)
B =	30 PSF (1440)	50 PSF (2400)
C =	40 PSF (1920)	67 PSF (3200)
D =	50 PSF (2400)	83 PSF (4000)
E =	60 PSF (2880)	100 PSF (4790)

SINGLE SPAN

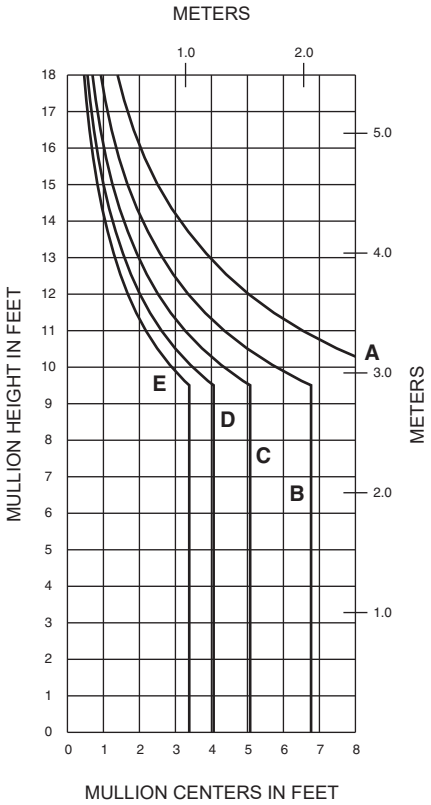

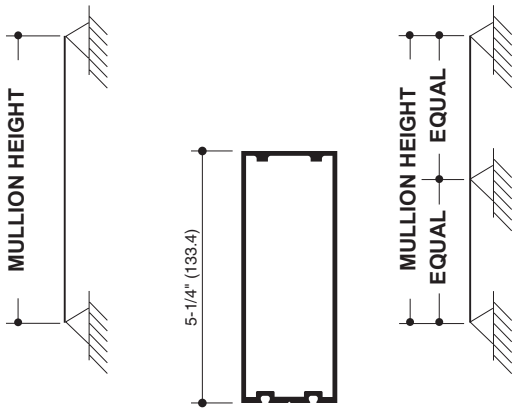

178025

I = 5.707(237.54 x 10^4)
S = 2.132(34.94 x 10^3)

TWIN SPAN

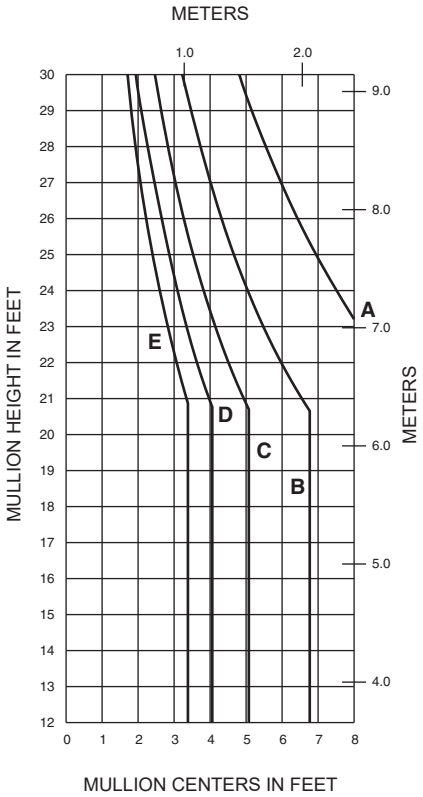

SINGLE SPAN

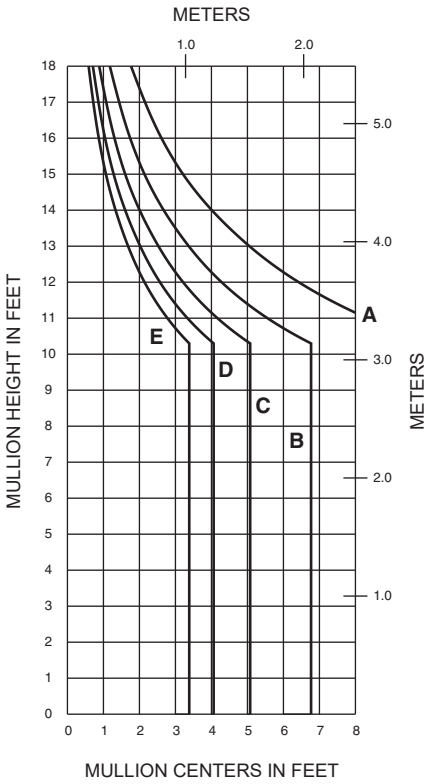

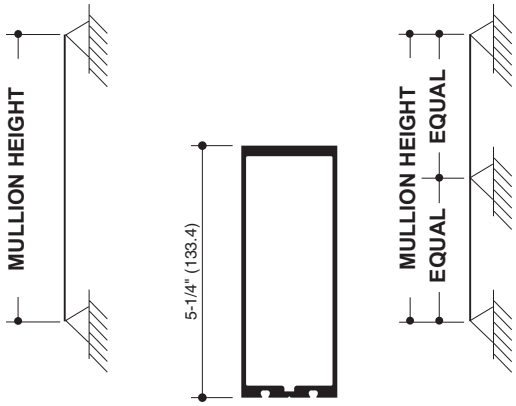

178026

I = 7.257(302.06 x 10^4)
S = 2.730(44.74 x 10^3)

TWIN SPAN

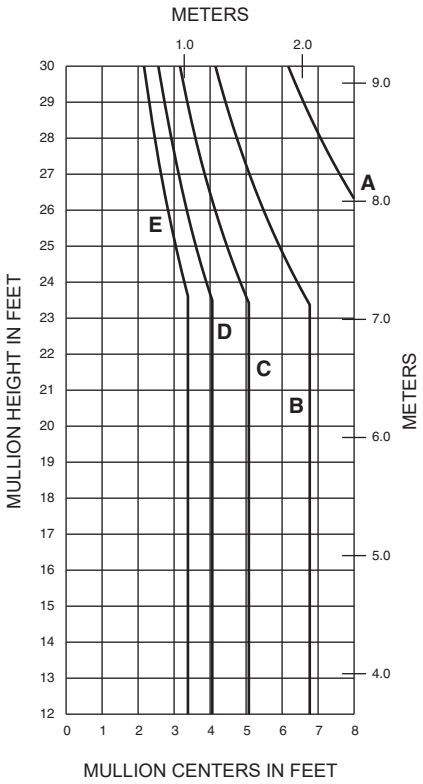

	Allowable Stress Design Load	LRFD Ultimate Design Load
A =	20 PSF (960)	33 PSF (1580)
B =	30 PSF (1440)	50 PSF (2400)
C =	40 PSF (1920)	67 PSF (3200)
D =	50 PSF (2400)	83 PSF (4000)
E =	60 PSF (2880)	100 PSF (4790)

SINGLE SPAN

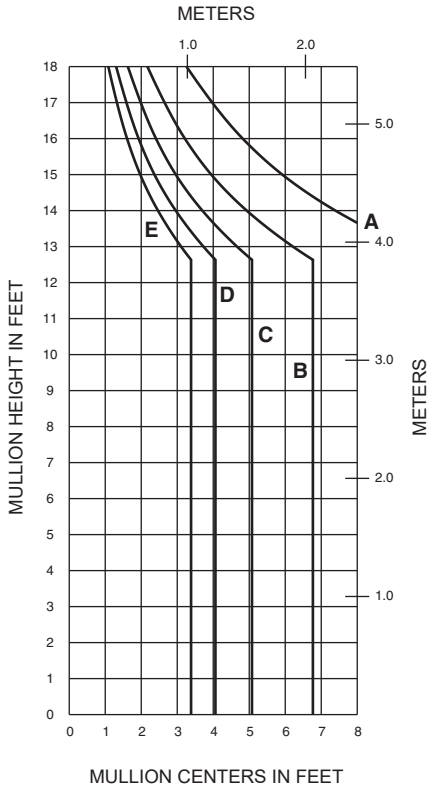

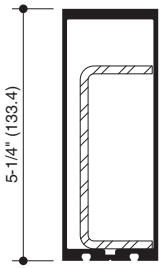

178026
W/162302

Ia = 7.257(302.06 x 10^4)
Sa = 2.730(44.74 x 10^3)
Is = 2.111(87.87 x 10^4)
Ss = 1.108(18.16 x 10^3)

TWIN SPAN

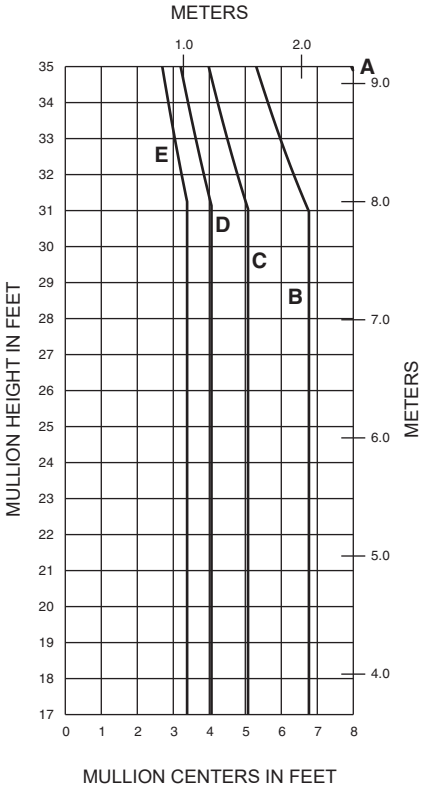

SINGLE SPAN

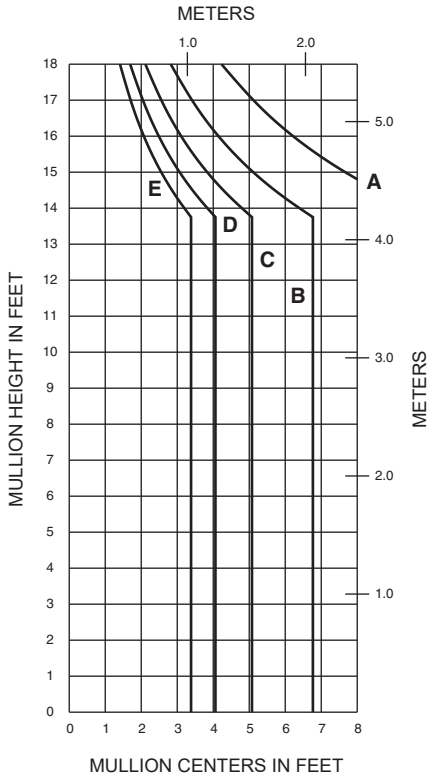

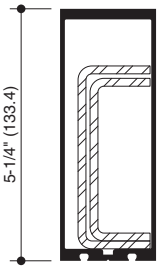

178026
W/162302/303

Ia = 7.257(302.06 x 10^4)
Sa = 2.730(44.74 x 10^3)
Is = 3.489(145.22 x 10^4)
Ss = 1.831(30.00 x 10^3)

TWIN SPAN

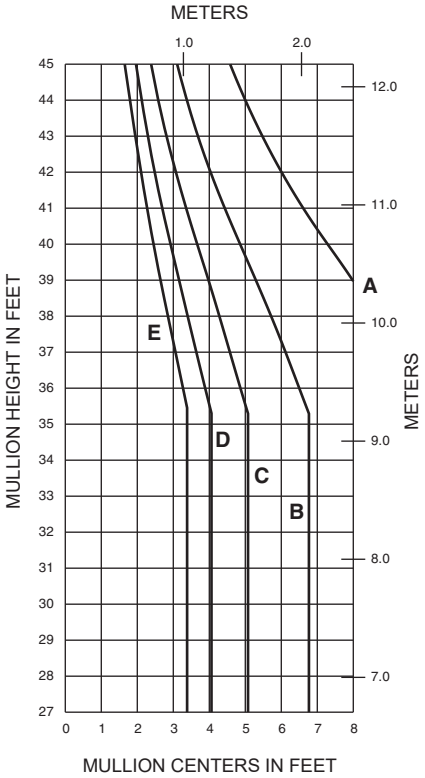

	Allowable Stress Design Load	LRFD Ultimate Design Load
A =	20 PSF (960)	33 PSF (1580)
B =	30 PSF (1440)	50 PSF (2400)
C =	40 PSF (1920)	67 PSF (3200)
D =	50 PSF (2400)	83 PSF (4000)
E =	60 PSF (2880)	100 PSF (4790)

SINGLE SPAN

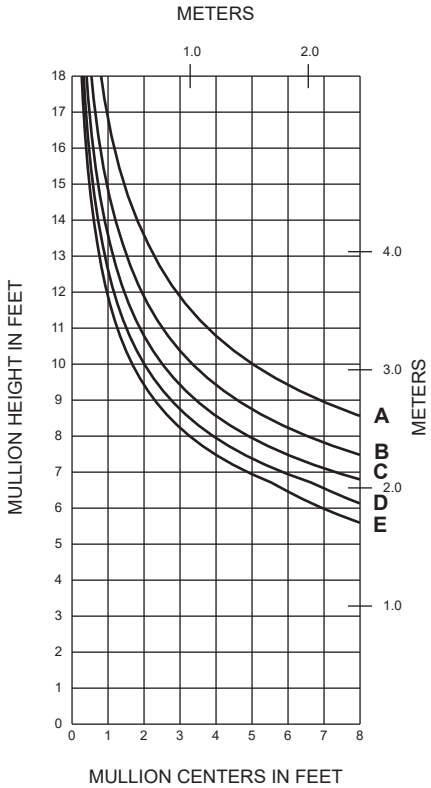

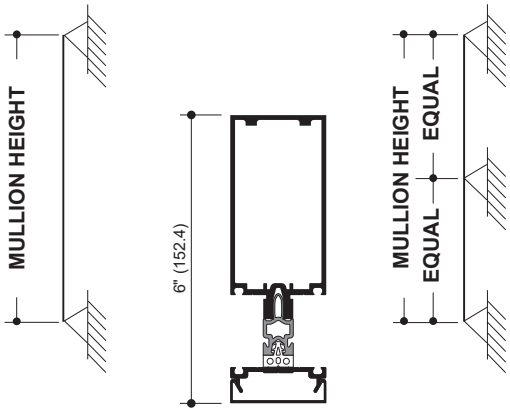

179270

I = 3.293 (137.06 x 10^4)
S = 1.487 (24.37 x 10^3)

TWIN SPAN

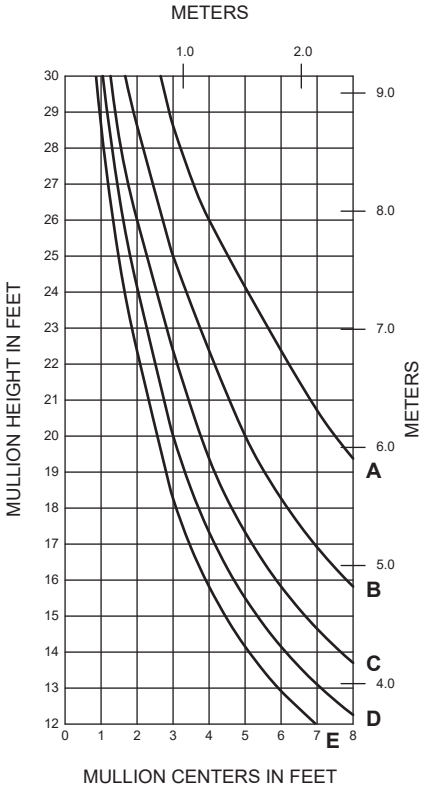

SINGLE SPAN

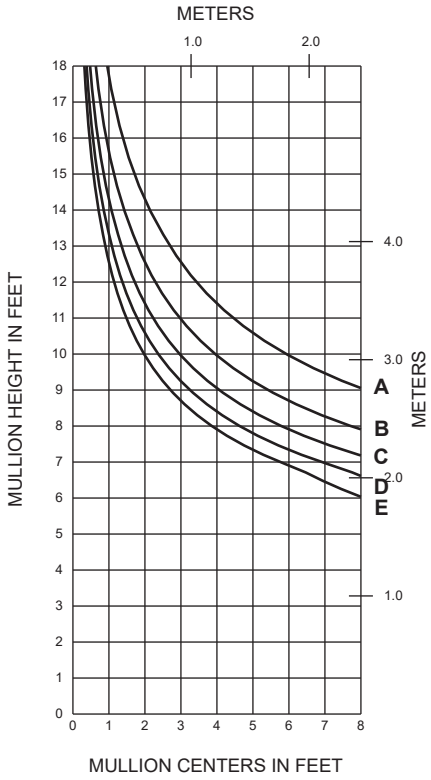

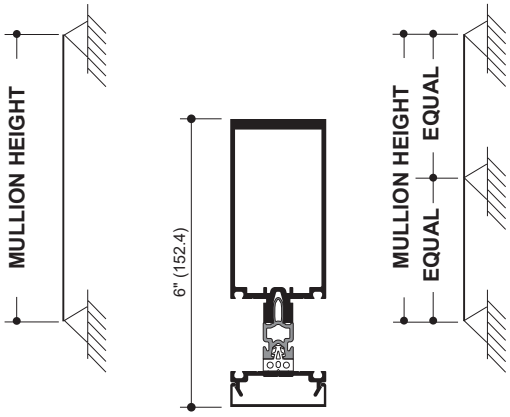

179271

I = 3.890 (161.91 x 10^4)
S = 1.730 (28.35 x 10^3)

TWIN SPAN

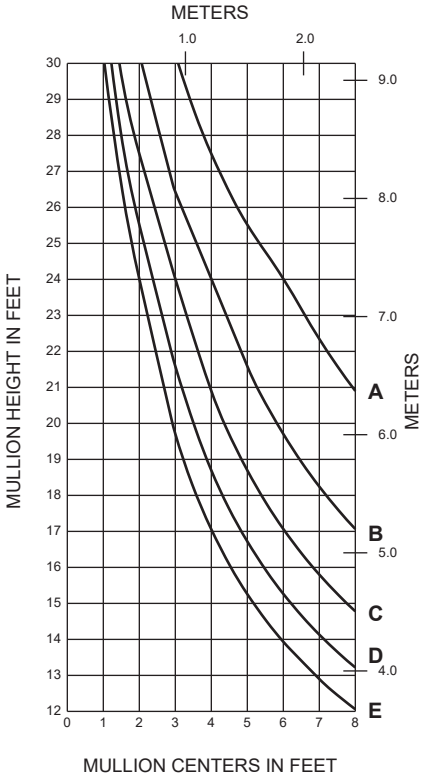

	Allowable Stress Design Load	LRFD Ultimate Design Load
A =	20 PSF (960)	33 PSF (1580)
B =	30 PSF (1440)	50 PSF (2400)
C =	40 PSF (1920)	67 PSF (3200)
D =	50 PSF (2400)	83 PSF (4000)
E =	60 PSF (2880)	100 PSF (4790)

SINGLE SPAN

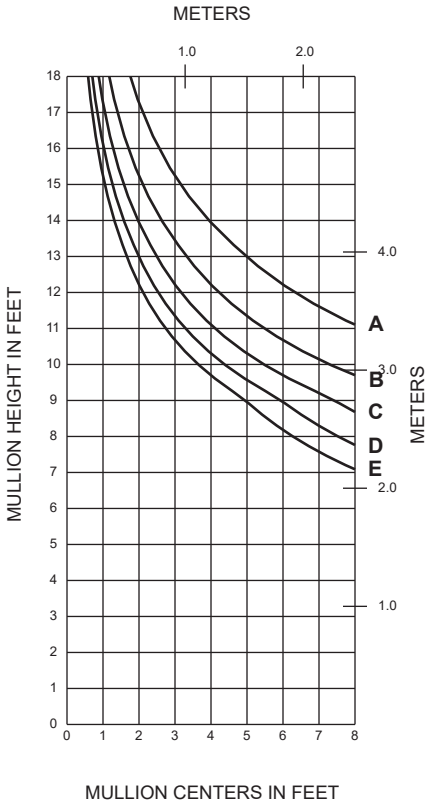

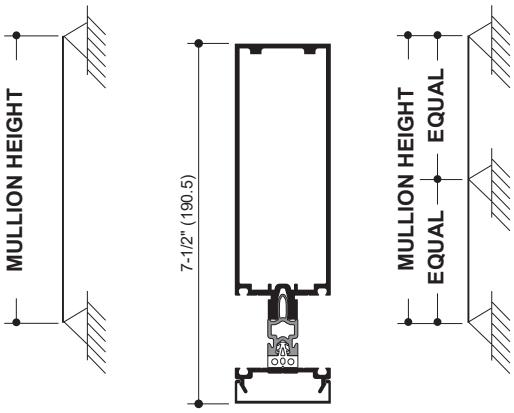

179272

I = 7.181 (298.89 x 10^4)
S = 2.385 (39.08 x 10^3)

TWIN SPAN

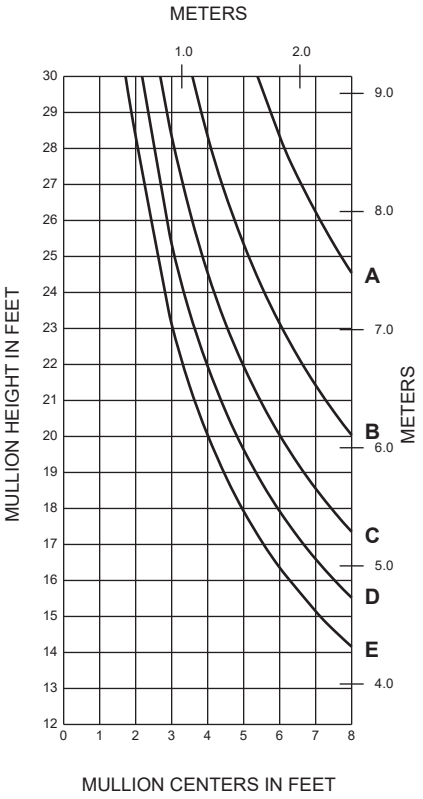

SINGLE SPAN

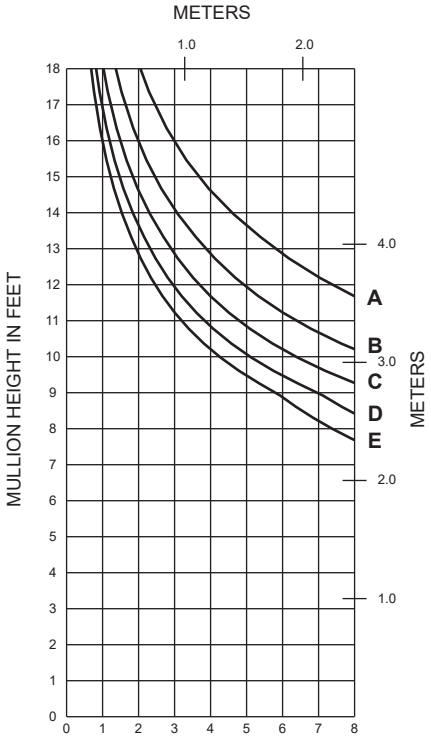

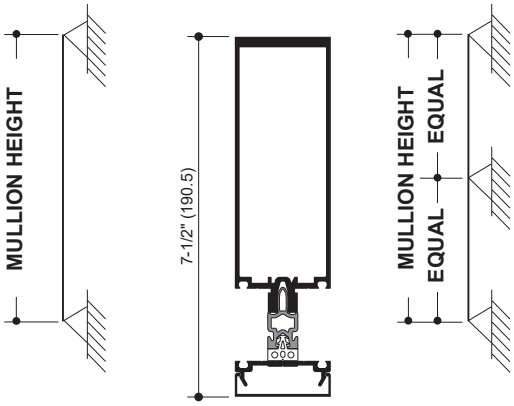

179273

I = 8.364 (348.13 x 10^4)
S = 2.805 (45.97 x 10^3)

TWIN SPAN

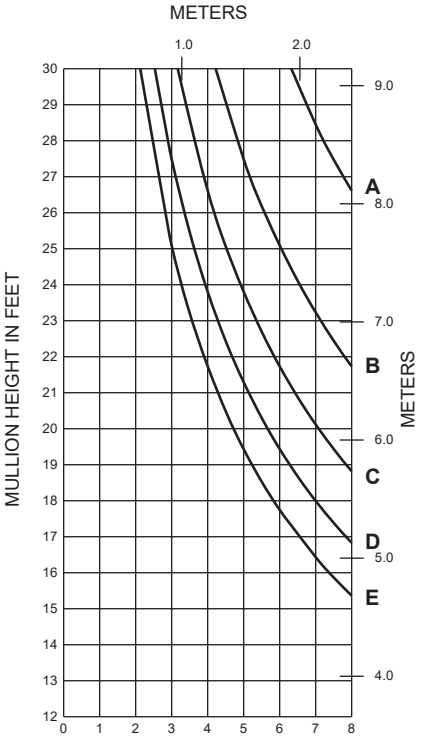

	Allowable Stress Design Load	LRFD Ultimate Design Load
A =	20 PSF (960)	33 PSF (1580)
B =	30 PSF (1440)	50 PSF (2400)
C =	40 PSF (1920)	67 PSF (3200)
D =	50 PSF (2400)	83 PSF (4000)
E =	60 PSF (2880)	100 PSF (4790)

SINGLE SPAN

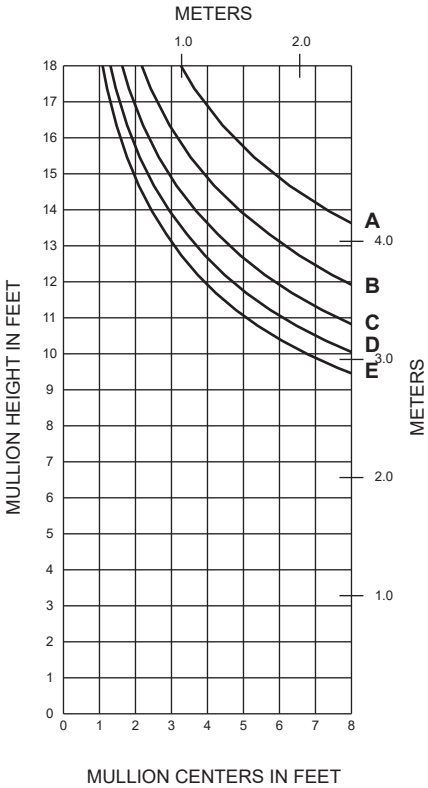

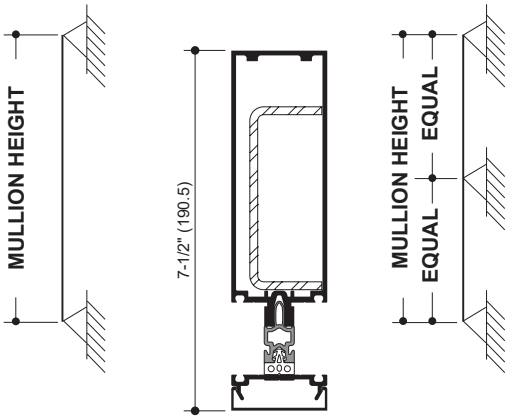

179272
W/162302

Ia = 8.364 (348.13 x 10^4)
Sa = 2.805 (45.97 x 10^3)
Is = 2.111 (87.87 x 10^4)
Ss = 1.108 (18.16 x 10^3)

TWIN SPAN

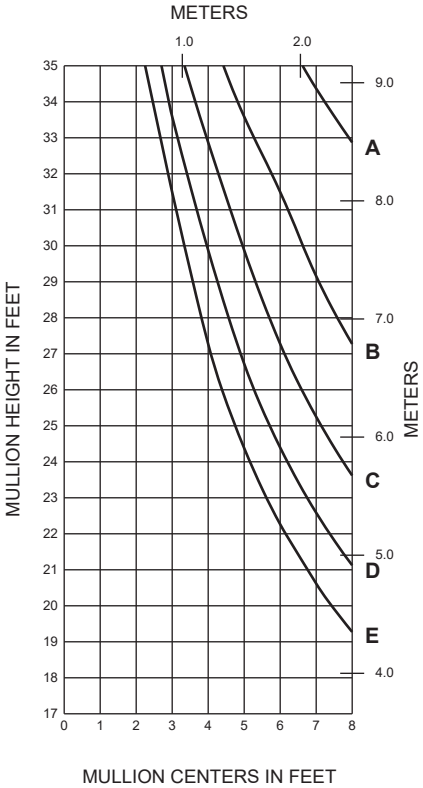

SINGLE SPAN

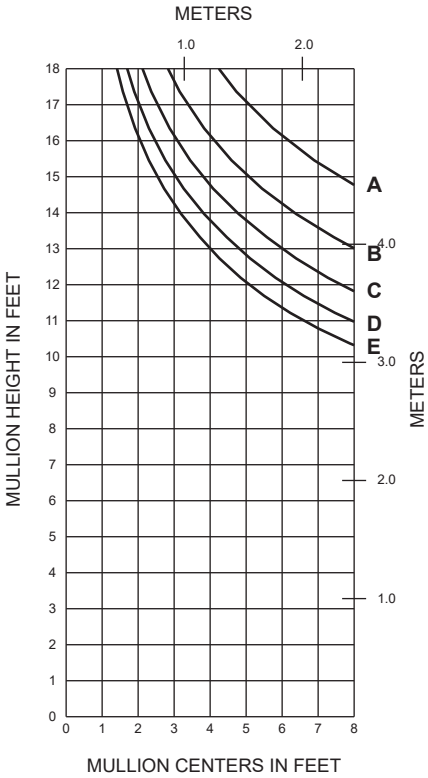

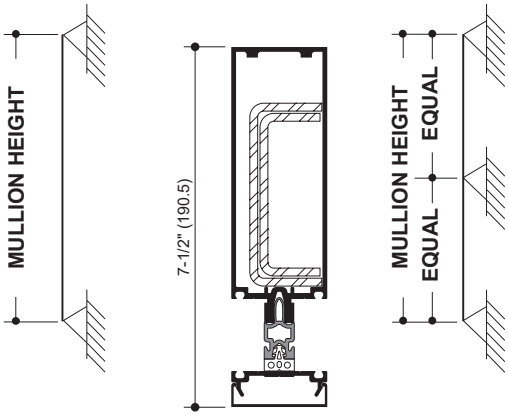

179272
W/162302/303

Ia = 7.181 (298.89 x 10^4)
Sa = 2.385 (39.08 x 10^3)
Is = 3.489 (145.22 x 10^4)
Ss = 1.831 (30.00 x 10^3)

TWIN SPAN

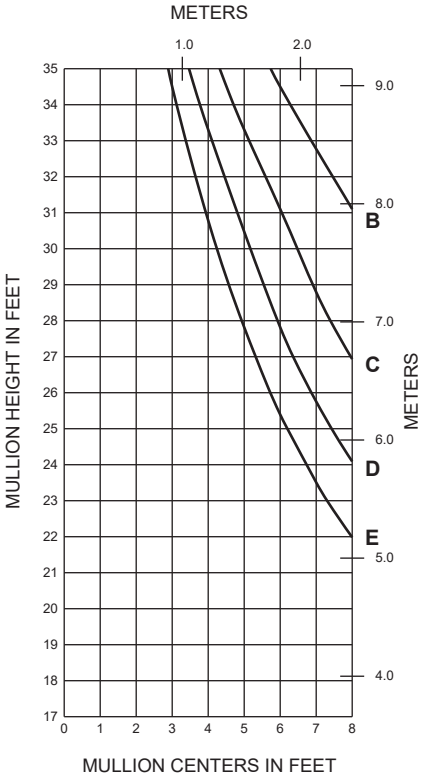

	Allowable Stress Design Load	LRFD Ultimate Design Load
A =	20 PSF (960)	33 PSF (1580)
B =	30 PSF (1440)	50 PSF (2400)
C =	40 PSF (1920)	67 PSF (3200)
D =	50 PSF (2400)	83 PSF (4000)
E =	60 PSF (2880)	100 PSF (4790)

SINGLE SPAN

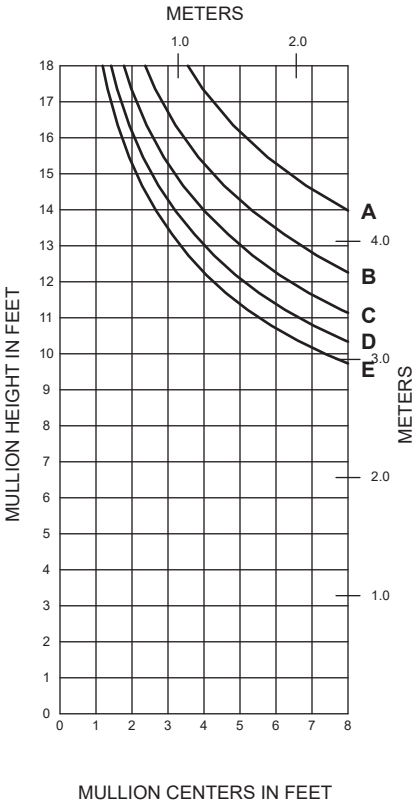

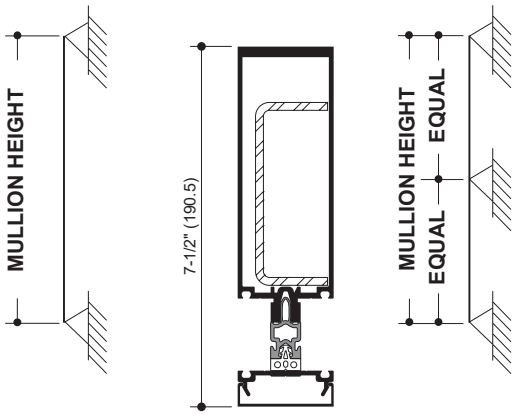

178004
W/162302

Ia = 8.364 (348.13 x 10^4)
Sa = 2.805 (45.97 x 10^3)
Is = 2.111 (87.87 x 10^4)
Ss = 1.108 (18.16 x 10^3)

TWIN SPAN

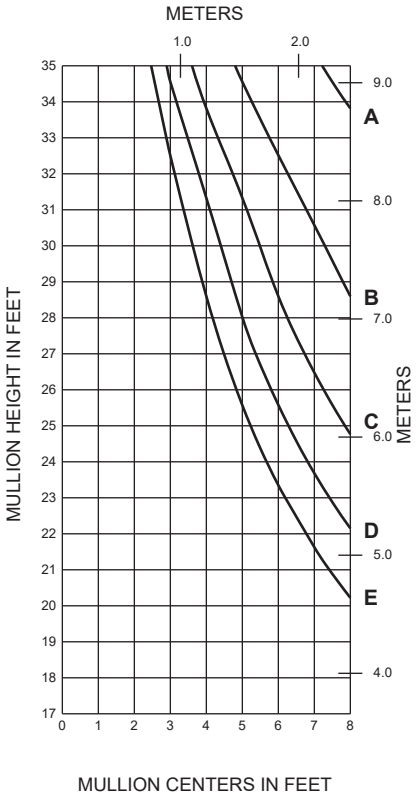

SINGLE SPAN

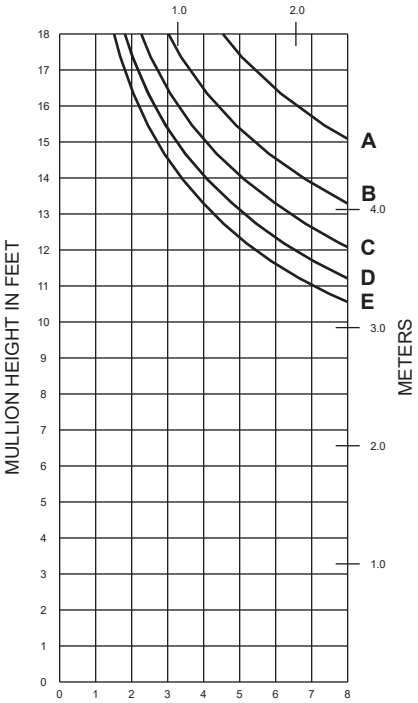

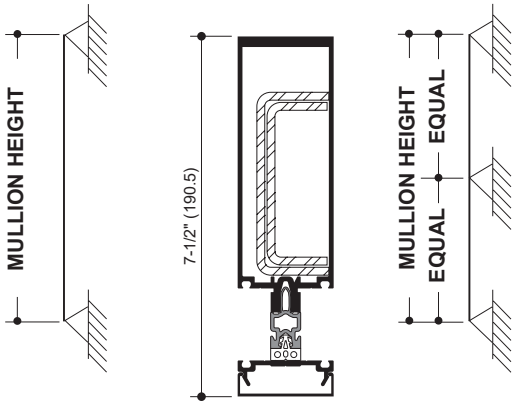

178004
W/162302/303

Ia = 8.364 (348.13 x 10^4)
Sa = 2.805 (45.97 x 10^3)
Is = 3.489 (145.22 x 10^4)
Ss = 1.831 (30.00 x 10^3)

TWIN SPAN

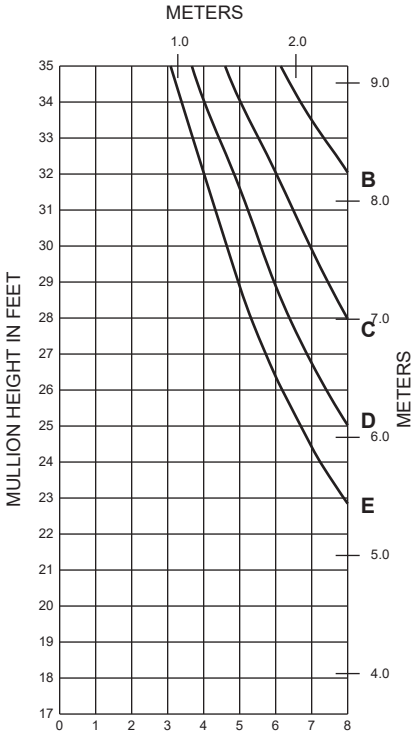

	Allowable Stress Design Load	LRFD Ultimate Design Load
A =	20 PSF (960)	33 PSF (1580)
B =	30 PSF (1440)	50 PSF (2400)
C =	40 PSF (1920)	67 PSF (3200)
D =	50 PSF (2400)	83 PSF (4000)
E =	60 PSF (2880)	100 PSF (4790)

SINGLE SPAN

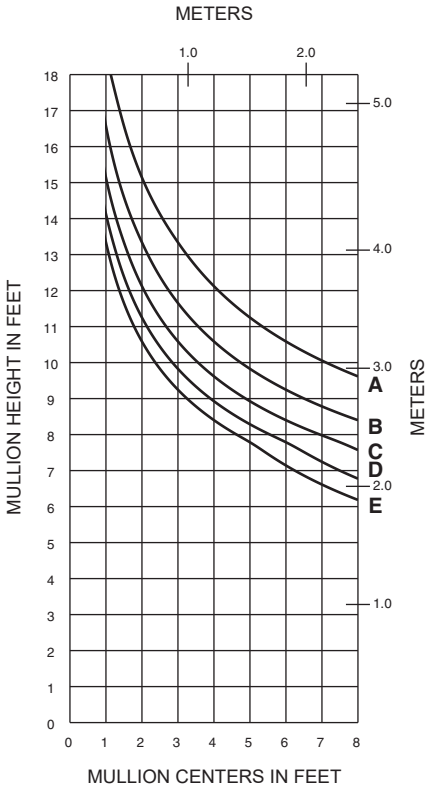

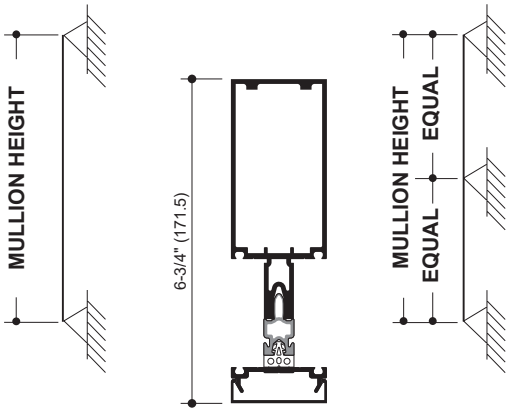

179201

I = 4.657 (193.84 x 10^4)
S = 1.816 (29.76 x 10^3)

TWIN SPAN

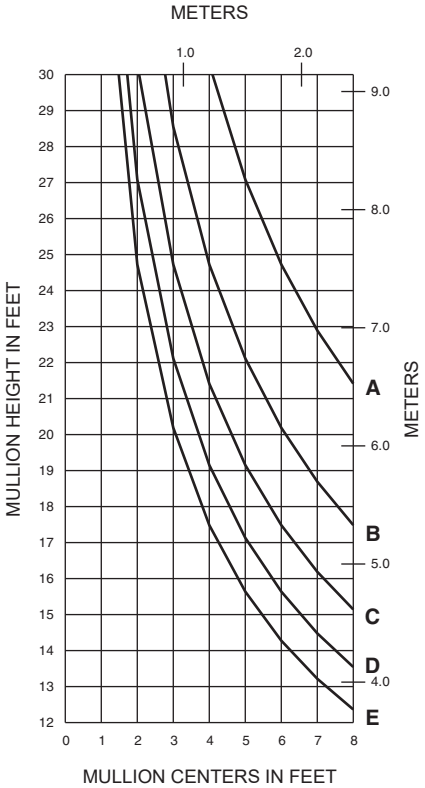

SINGLE SPAN

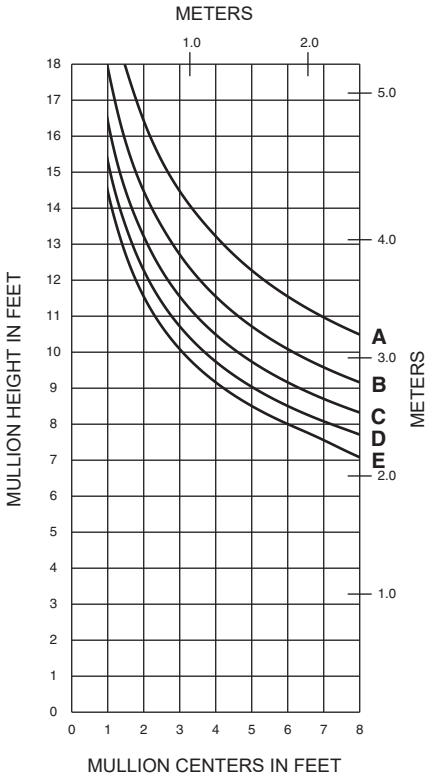

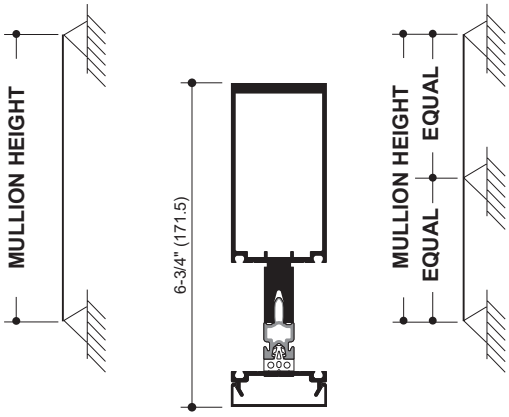

179202

I = 6.042 (251.49 x 10^4)
S = 2.380 (39.00 x 10^3)

TWIN SPAN

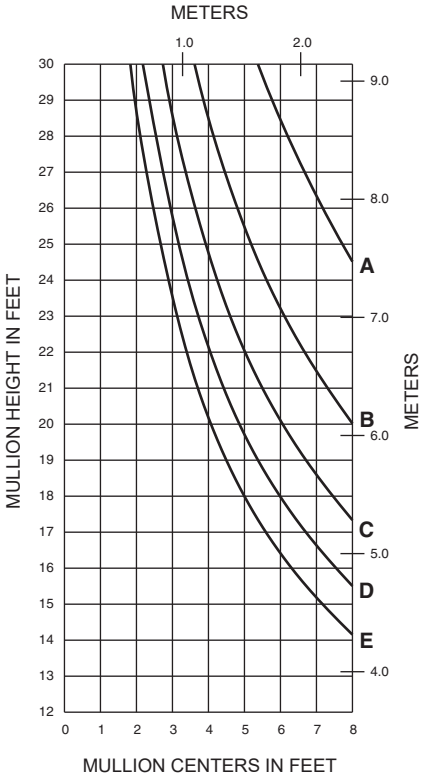

	Allowable Stress Design Load	LRFD Ultimate Design Load
A =	20 PSF (960)	33 PSF (1580)
B =	30 PSF (1440)	50 PSF (2400)
C =	40 PSF (1920)	67 PSF (3200)
D =	50 PSF (2400)	83 PSF (4000)
E =	60 PSF (2880)	100 PSF (4790)

SINGLE SPAN

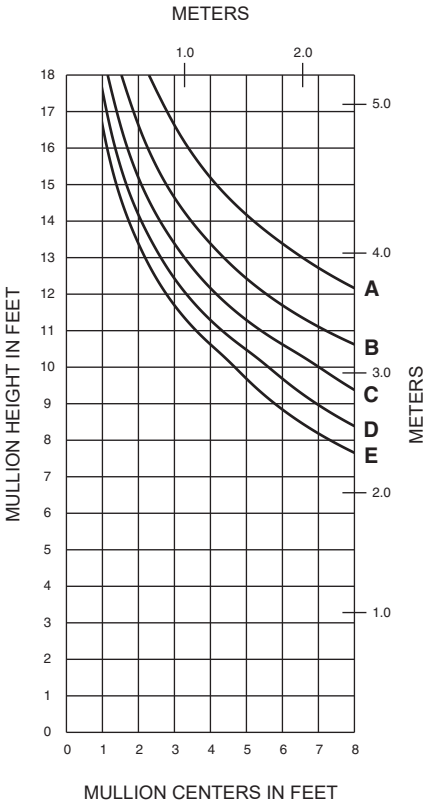

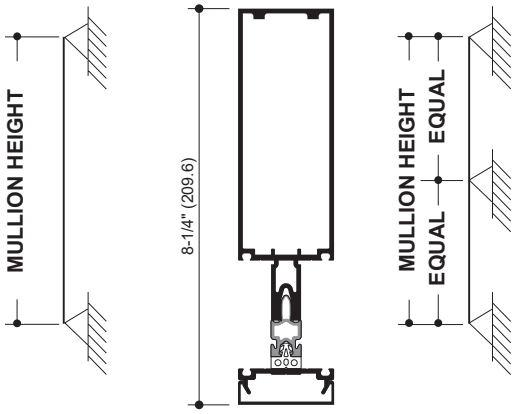

179203

I = 9.414 (391.84 x 10^4)
S = 2.782 (45.59 x 10^3)

TWIN SPAN

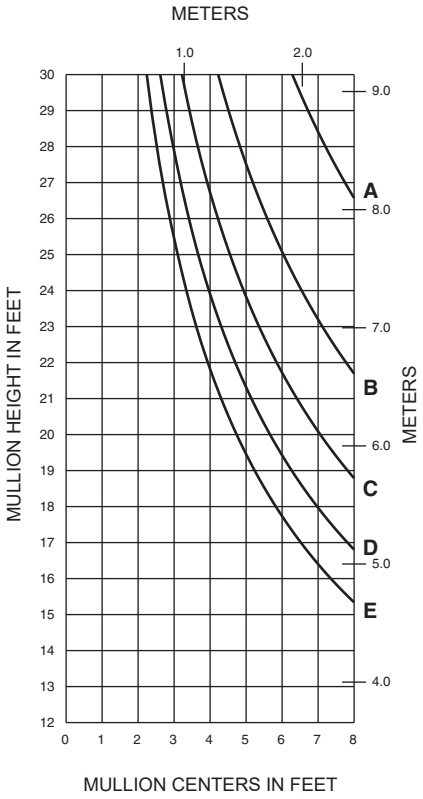

SINGLE SPAN

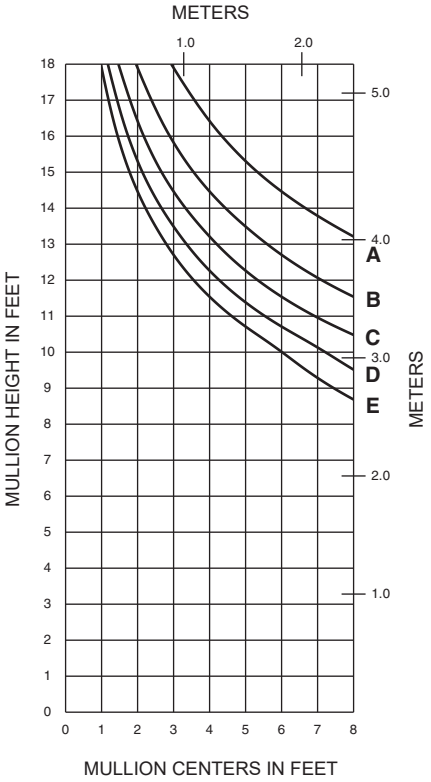

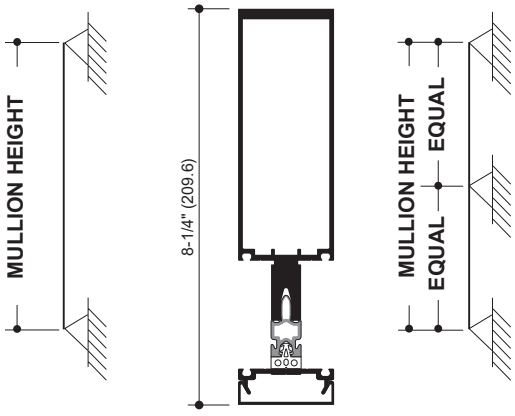

179204

I = 12.059 (501.93 x 10^4)
S = 3.580 (58.67 x 10^3)

TWIN SPAN

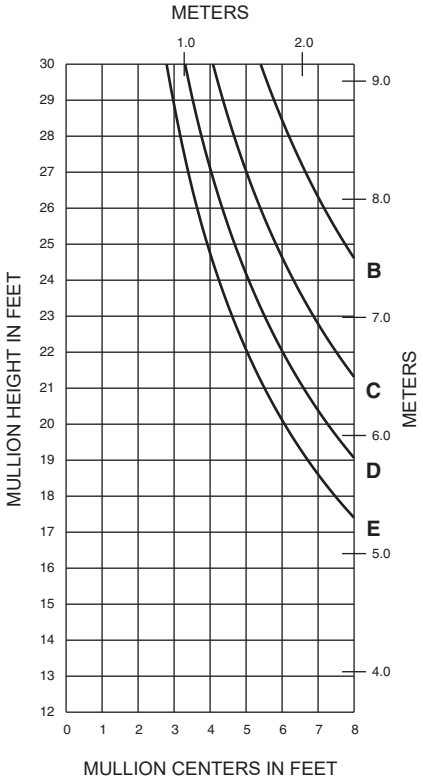

	Allowable Stress Design Load	LRFD Ultimate Design Load
A =	20 PSF (960)	33 PSF (1580)
B =	30 PSF (1440)	50 PSF (2400)
C =	40 PSF (1920)	67 PSF (3200)
D =	50 PSF (2400)	83 PSF (4000)
E =	60 PSF (2880)	100 PSF (4790)

SINGLE SPAN

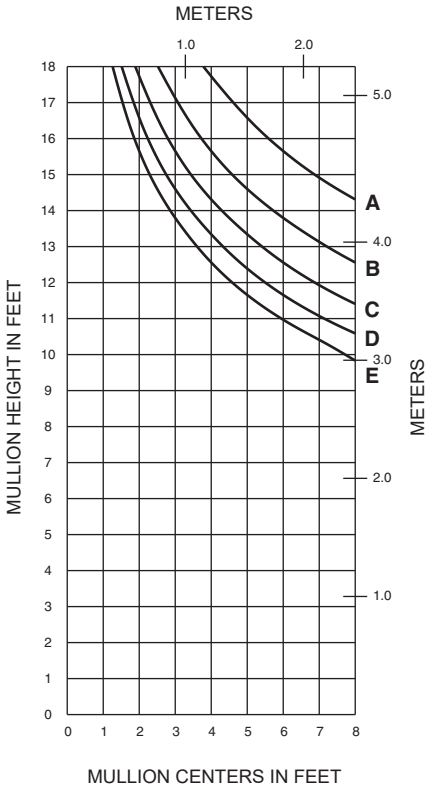

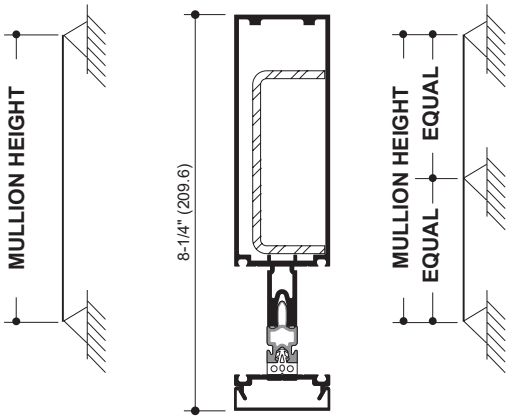

179203
W/162302

Ia = 9.414 (391.84 x 10^4)
Sa = 2.782 (45.59 x 10^3)
Is = 2.111 (87.87 x 10^4)
Ss = 1.108 (18.16 x 10^3)

TWIN SPAN

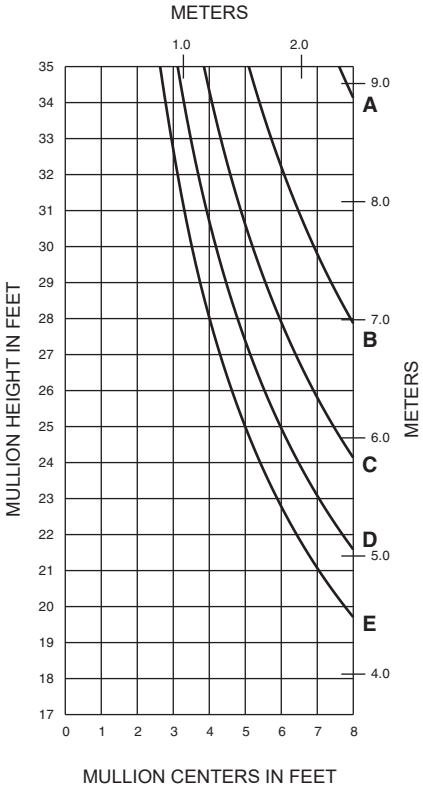

SINGLE SPAN

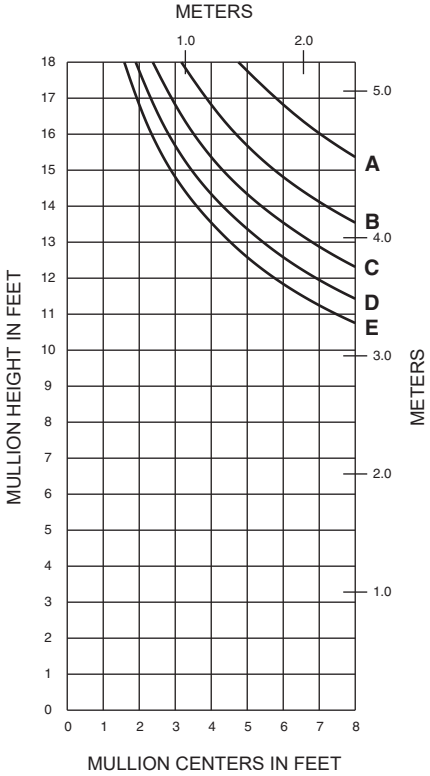

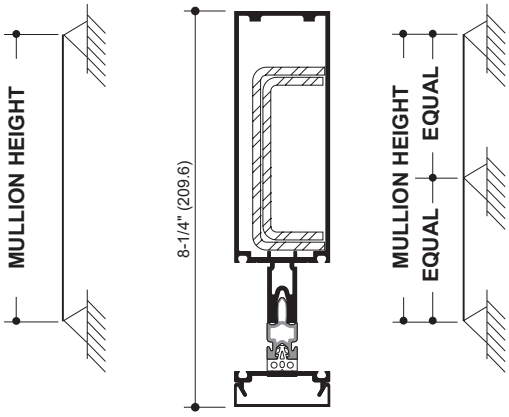

179203
W/162302/303

Ia = 9.414 (391.84 x 10^4)
Sa = 2.782 (45.59 x 10^3)
Is = 3.489 (145.22 x 10^4)
Ss = 1.831 (30.00 x 10^3)

TWIN SPAN

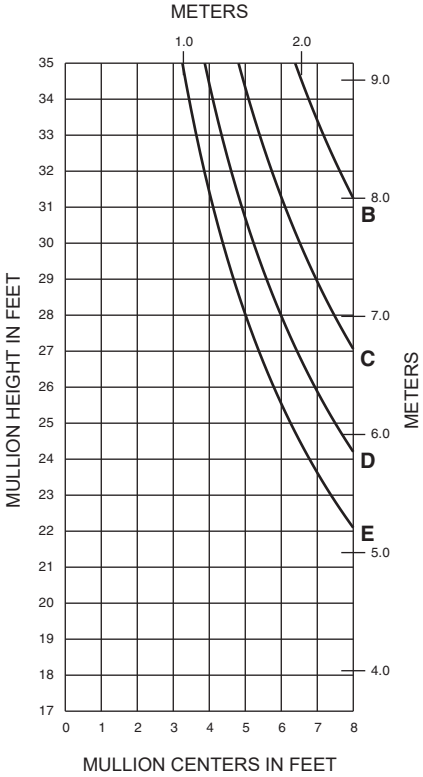

	Allowable Stress Design Load	LRFD Ultimate Design Load
A =	20 PSF (960)	33 PSF (1580)
B =	30 PSF (1440)	50 PSF (2400)
C =	40 PSF (1920)	67 PSF (3200)
D =	50 PSF (2400)	83 PSF (4000)
E =	60 PSF (2880)	100 PSF (4790)

SINGLE SPAN

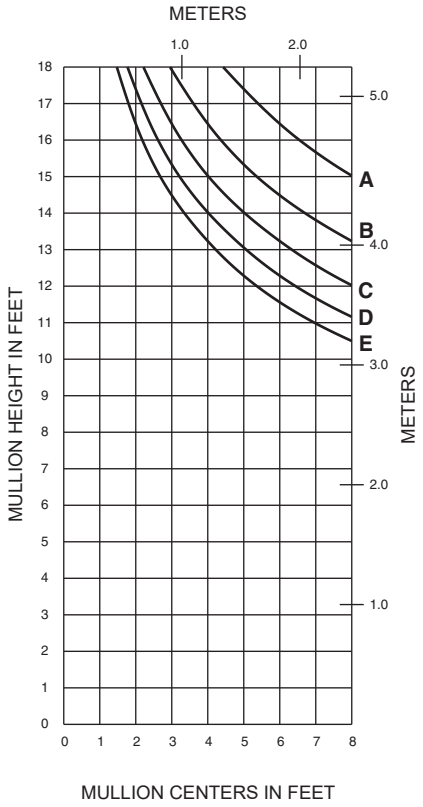

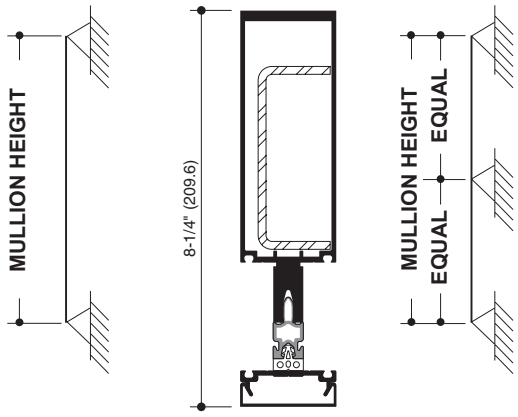

179204
W/162302

Ia = 12.059 (501.93 x 10^4)
Sa = 3.580 (58.67 x 10^3)
Is = 2.111 (87.87 x 10^4)
Ss = 1.108 (18.16 x 10^3)

TWIN SPAN

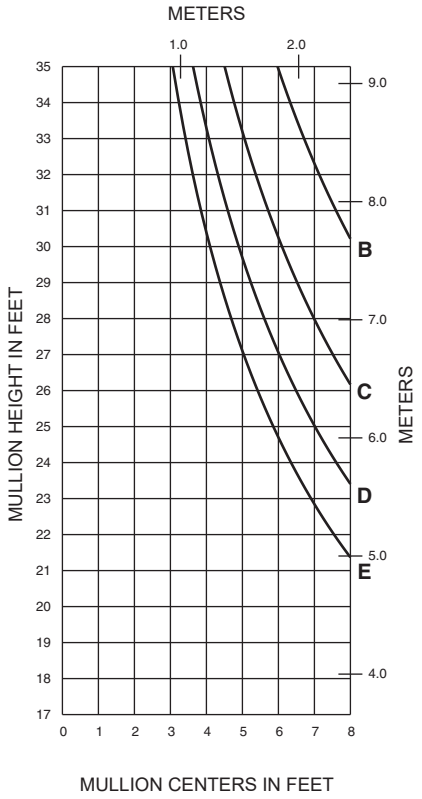

SINGLE SPAN

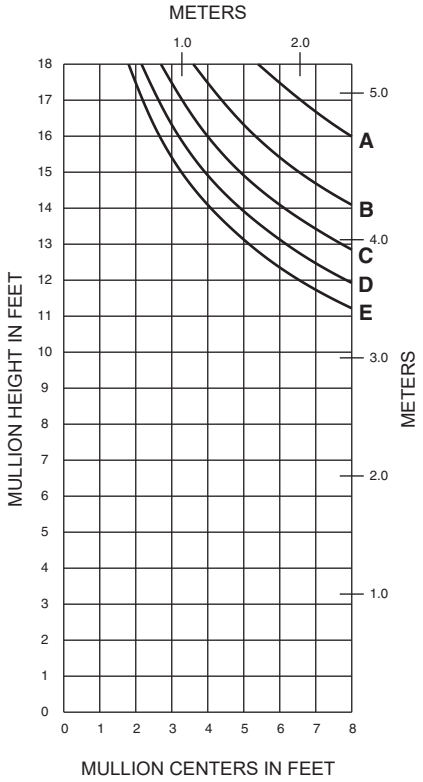

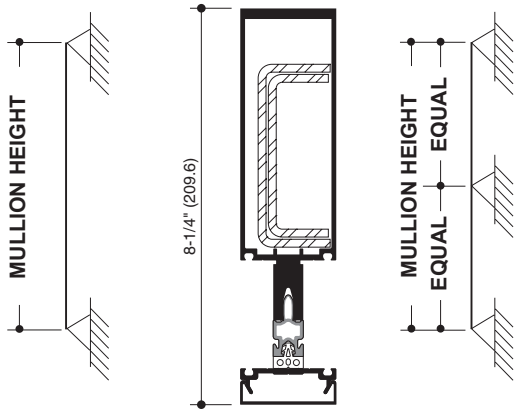

179204
W/162302/303

Ia = 12.059 (501.93 x 10^4)
Sa = 3.580 (58.67 x 10^3)
Is = 3.489 (145.22 x 10^4)
Ss = 1.831 (30.00 x 10^3)

TWIN SPAN

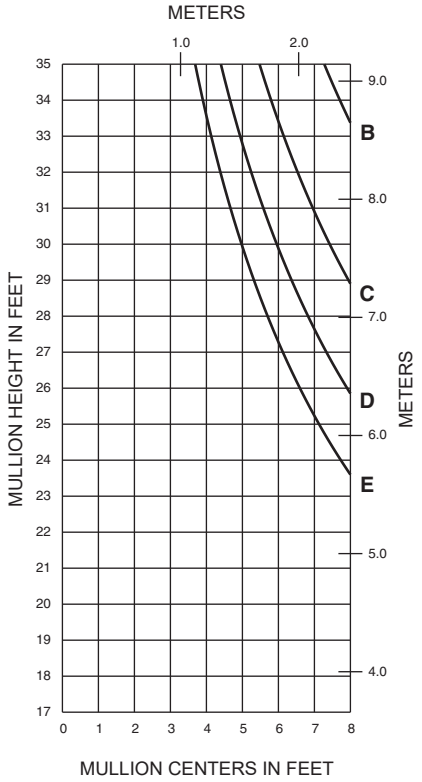

DEADLOAD CHARTS (TUBULAR)
(1" INFILL)

EC 97911-281

A - 1" GLASS (1/4 POINT LOADING)
B - 1" GLASS (1/8 POINT LOADING)

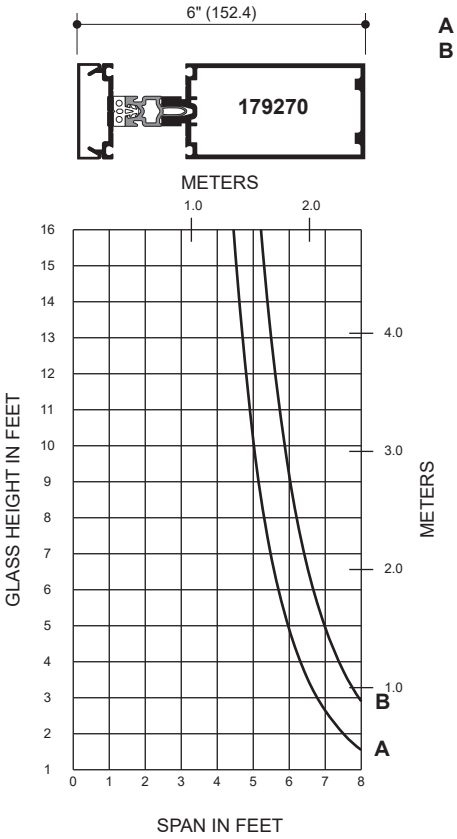

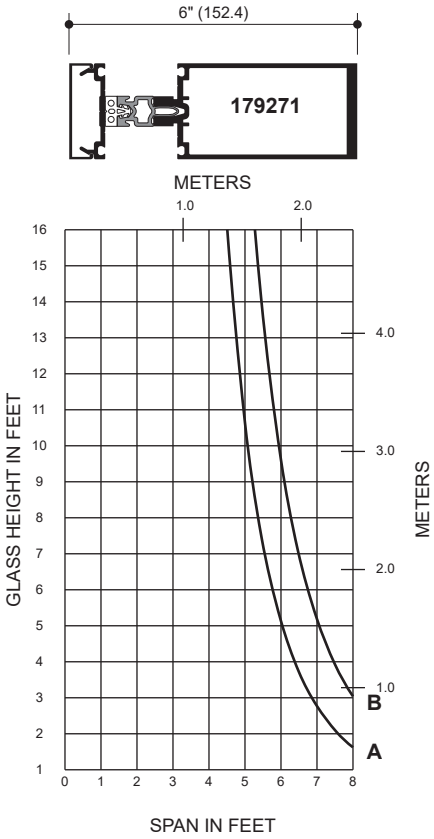

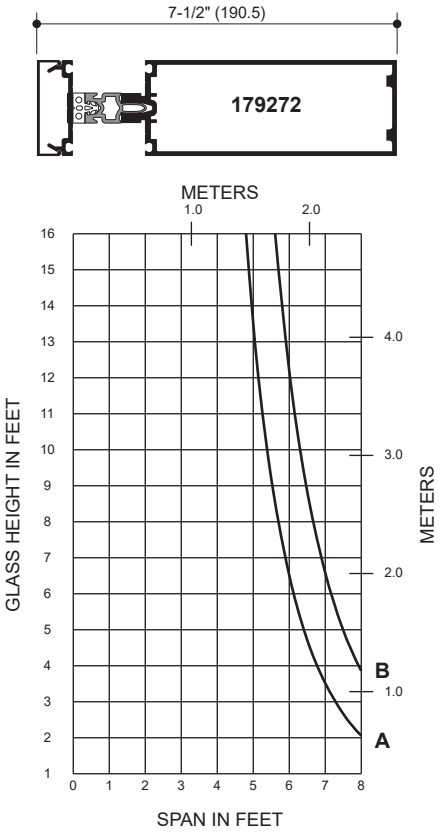

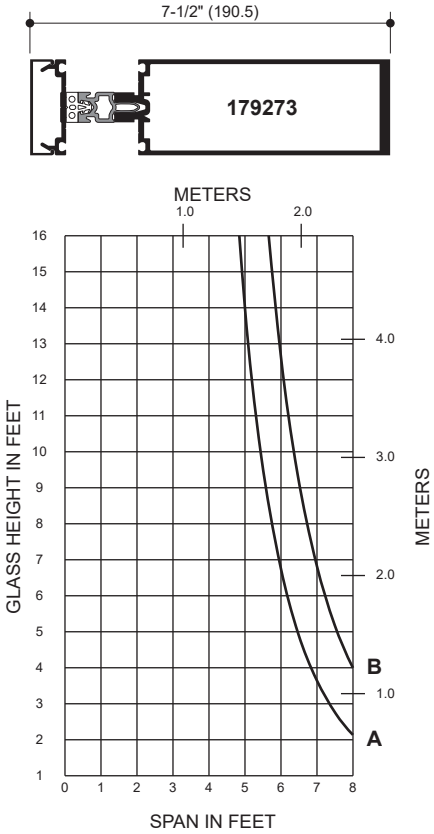

A - 1" GLASS (1/4 POINT LOADING)
B - 1" GLASS (1/8 POINT LOADING)

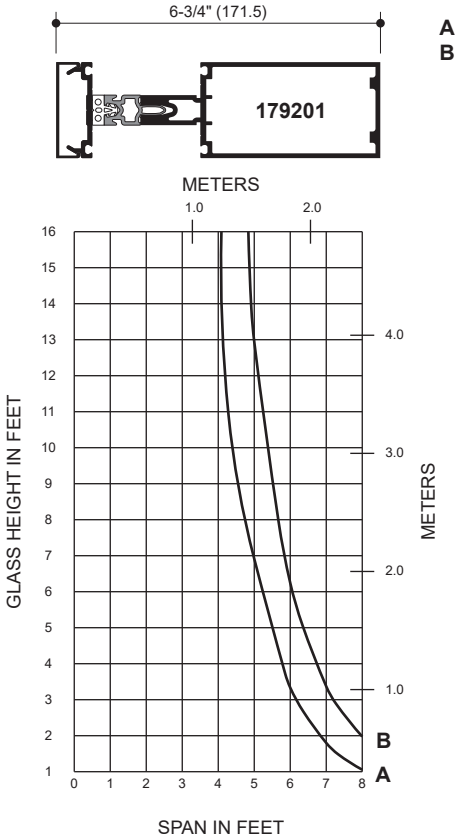

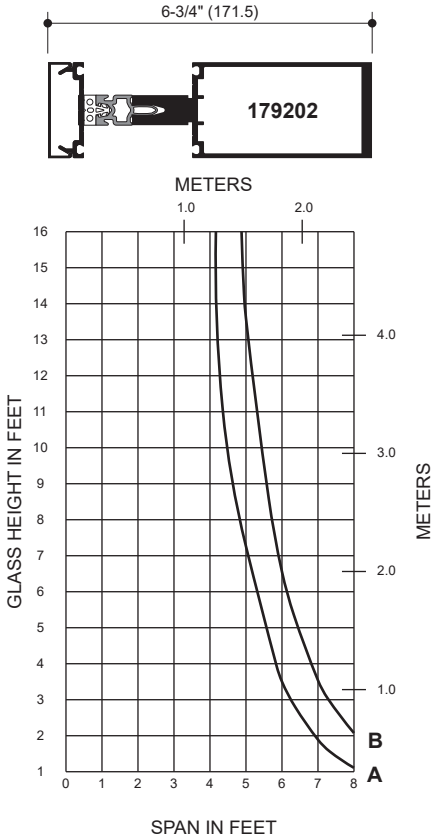

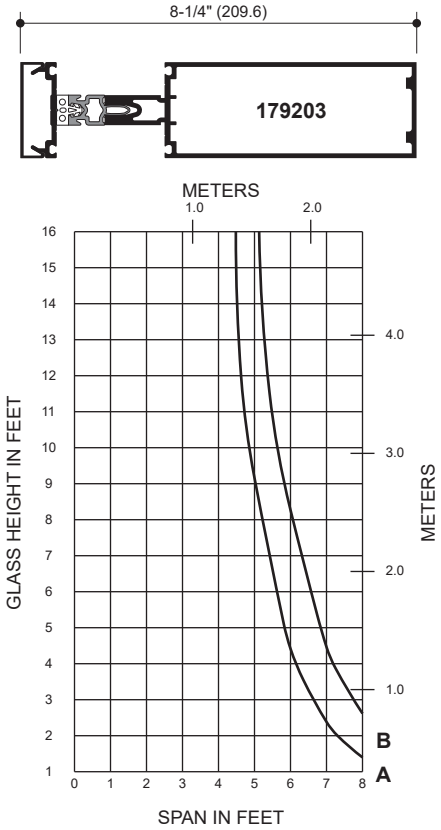

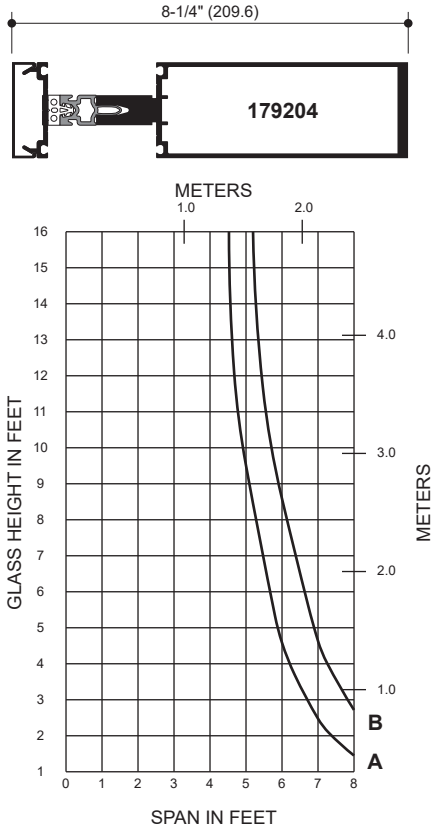

1620UT SSG Curtain Wall System

DEADLOAD CHARTS (OPEN BACK)
(1" INFILL)

EC 97911-281

A - 1" GLASS (1/4 POINT LOADING)
B - 1" GLASS (1/8 POINT LOADING)

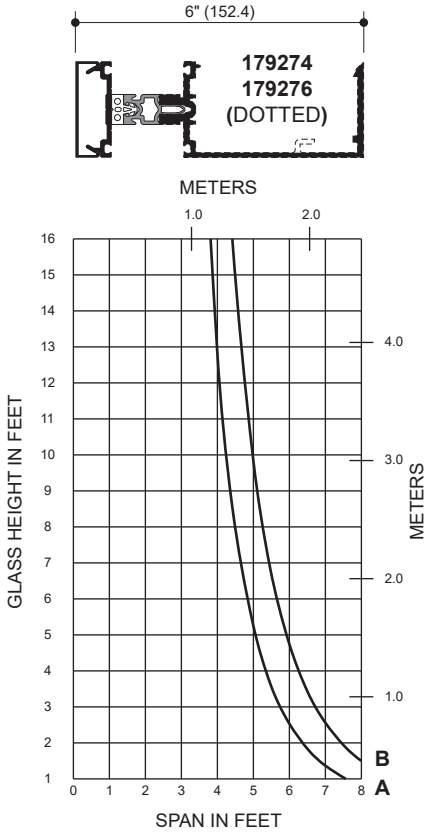

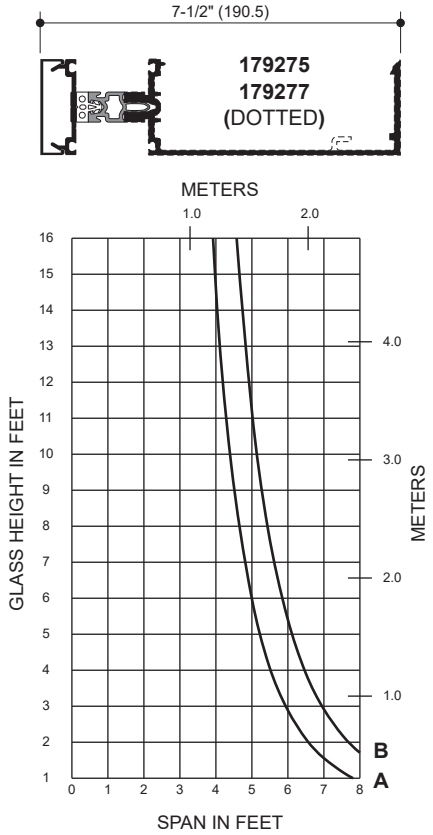

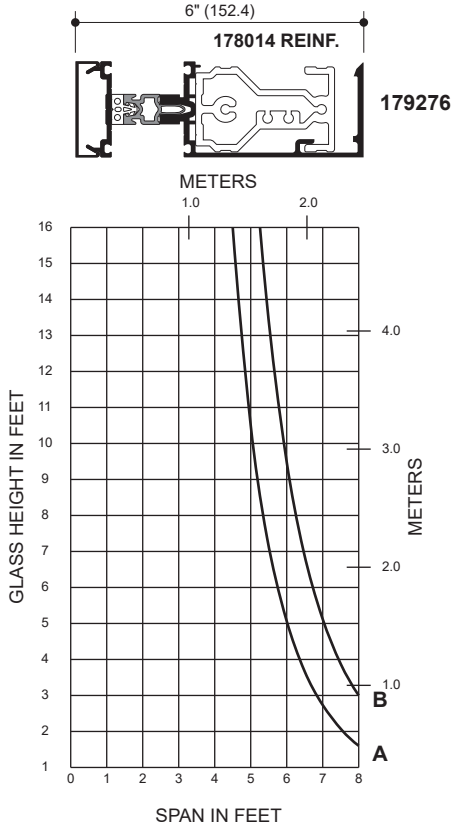

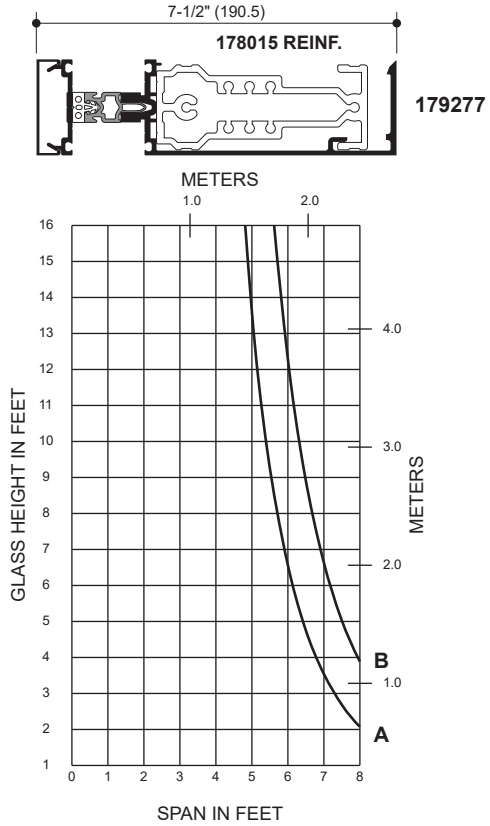

DEADLOAD CHARTS (OPEN BACK)
(1-3/4" INFILL)

A - 1" GLASS (1/4 POINT LOADING)
B - 1" GLASS (1/8 POINT LOADING)

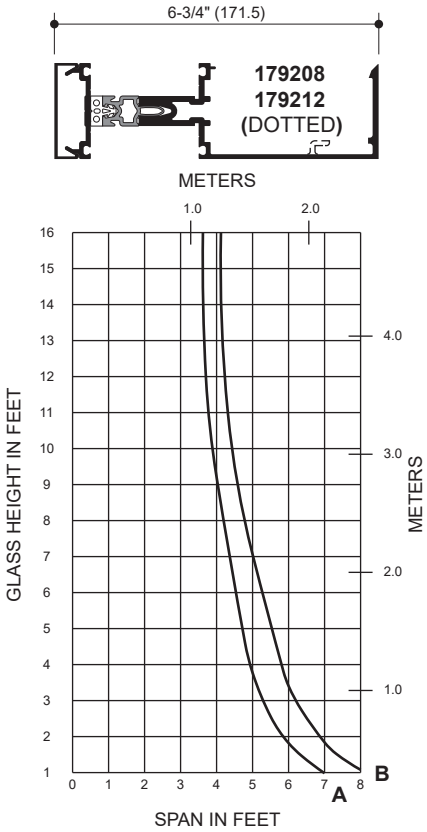

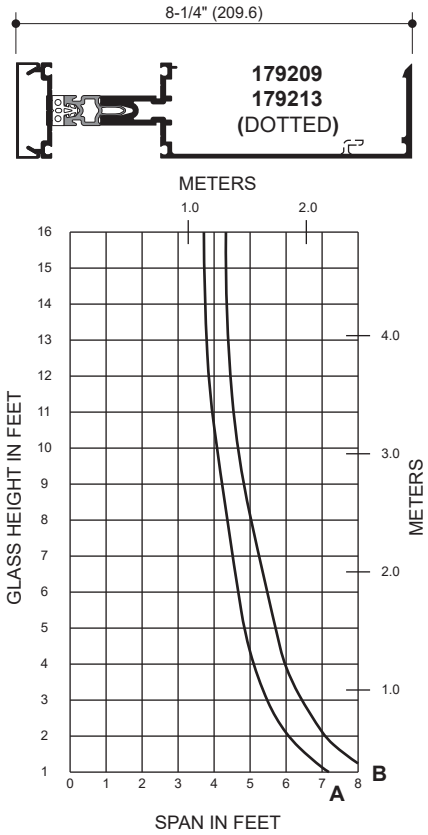

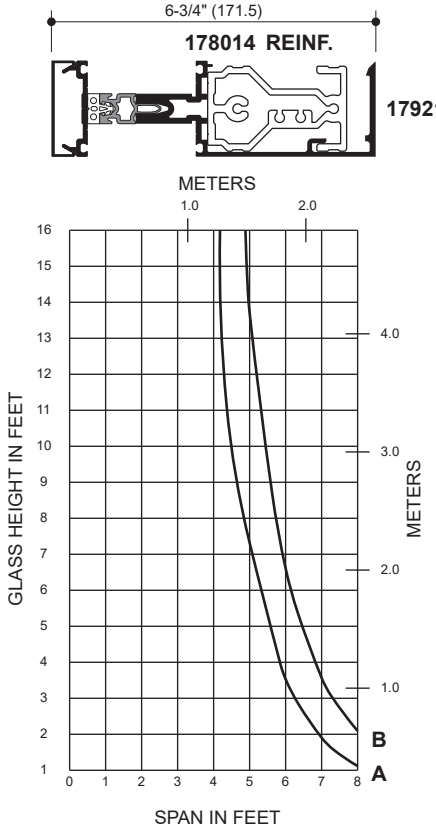

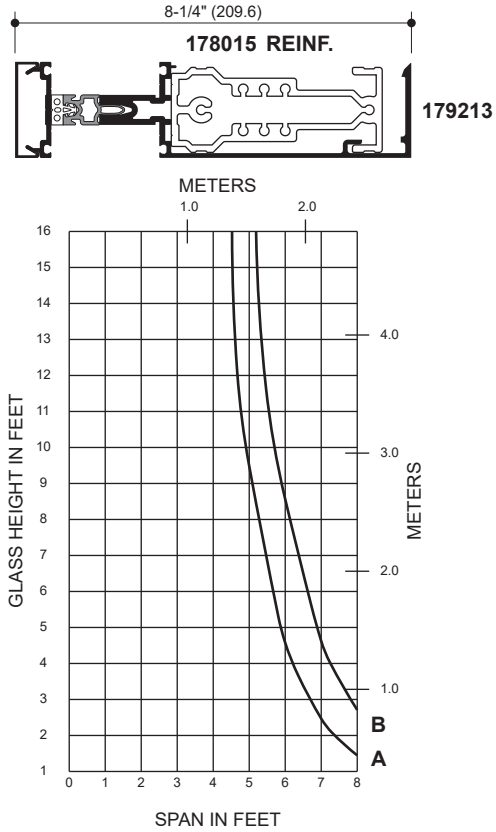

Generic Project Specific U-factor Example Calculation
(Percent of Glass will vary on specific products depending on sitelines)

(Based on single bay of Curtain Wall/Window Wall)

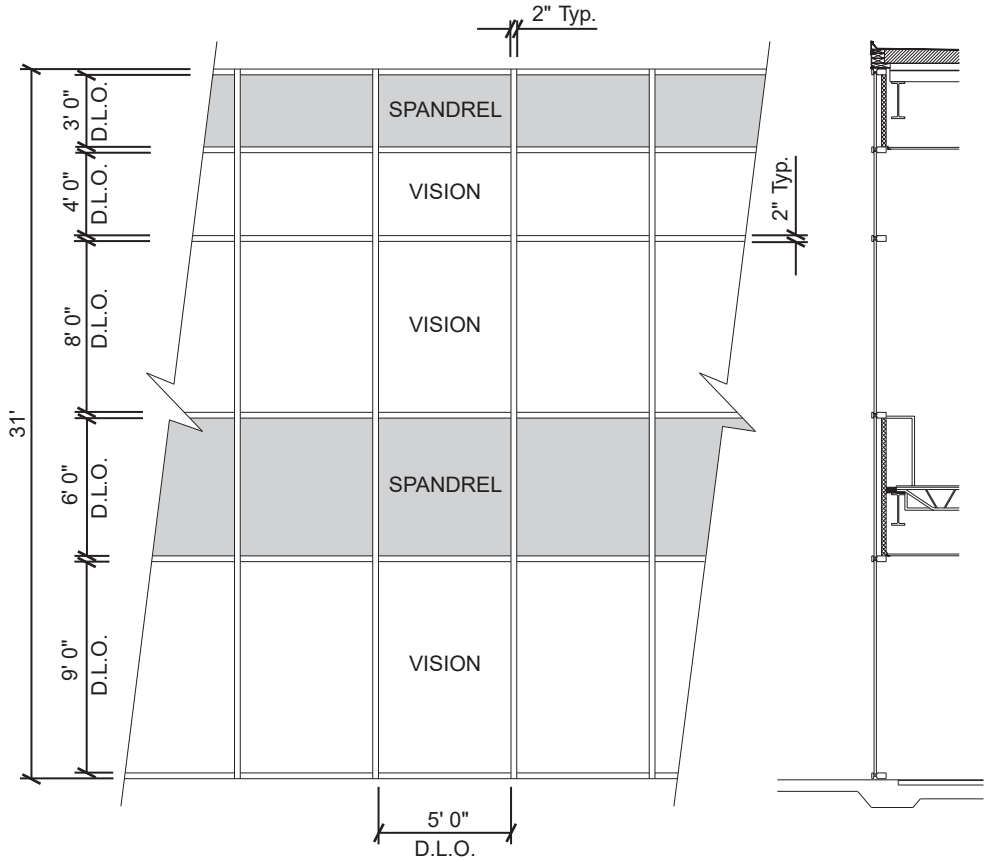

Vision Area

Example Glass U-factor	= 0.28 Btu/(ft^2 · h · °F)
Vision Area	= 5(9 + 8 + 4) = 105.0 ft^2
Total Area (Vision)*	= 5' 2" (9' 3" + 8' 2" + 4' 2") = 111.5 ft^2
Percentage of Vision Glass	= (Vision Area ÷ Total Area)100 = (105.0 ÷ 111.5)100 = 94%

* Area taken to the centerlines of vertical mullions and centerline of horizontal at spandrels.

Vision Area Chart

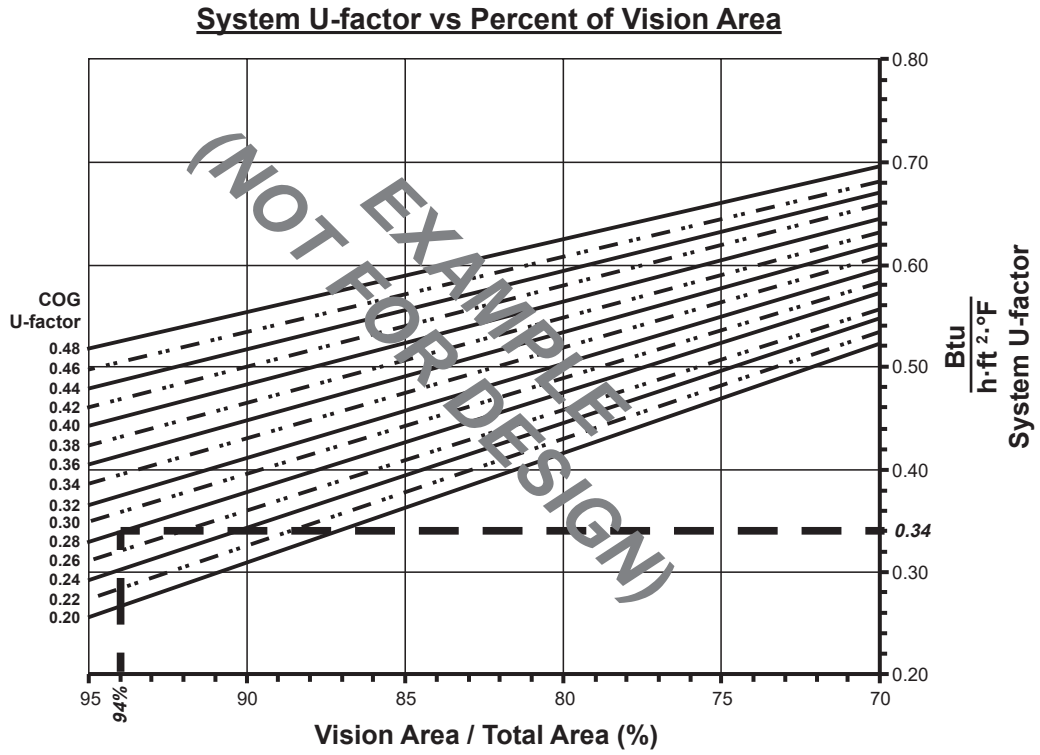

Based on a single curtain wall bay of 94% vision glass and center of glass U-factor of 0.28, System U-factor is equal to 0.34 Btu/(h·ft ²·°F)

Aluminum Pressure Plate
1" Double Glazed - Warm-Edge Glazing Spacer

Note:
Values in parentheses are metric.
COG=Center of Glass.
Charts are generated per AAMA 507.

System U-Factor for Vision Glass

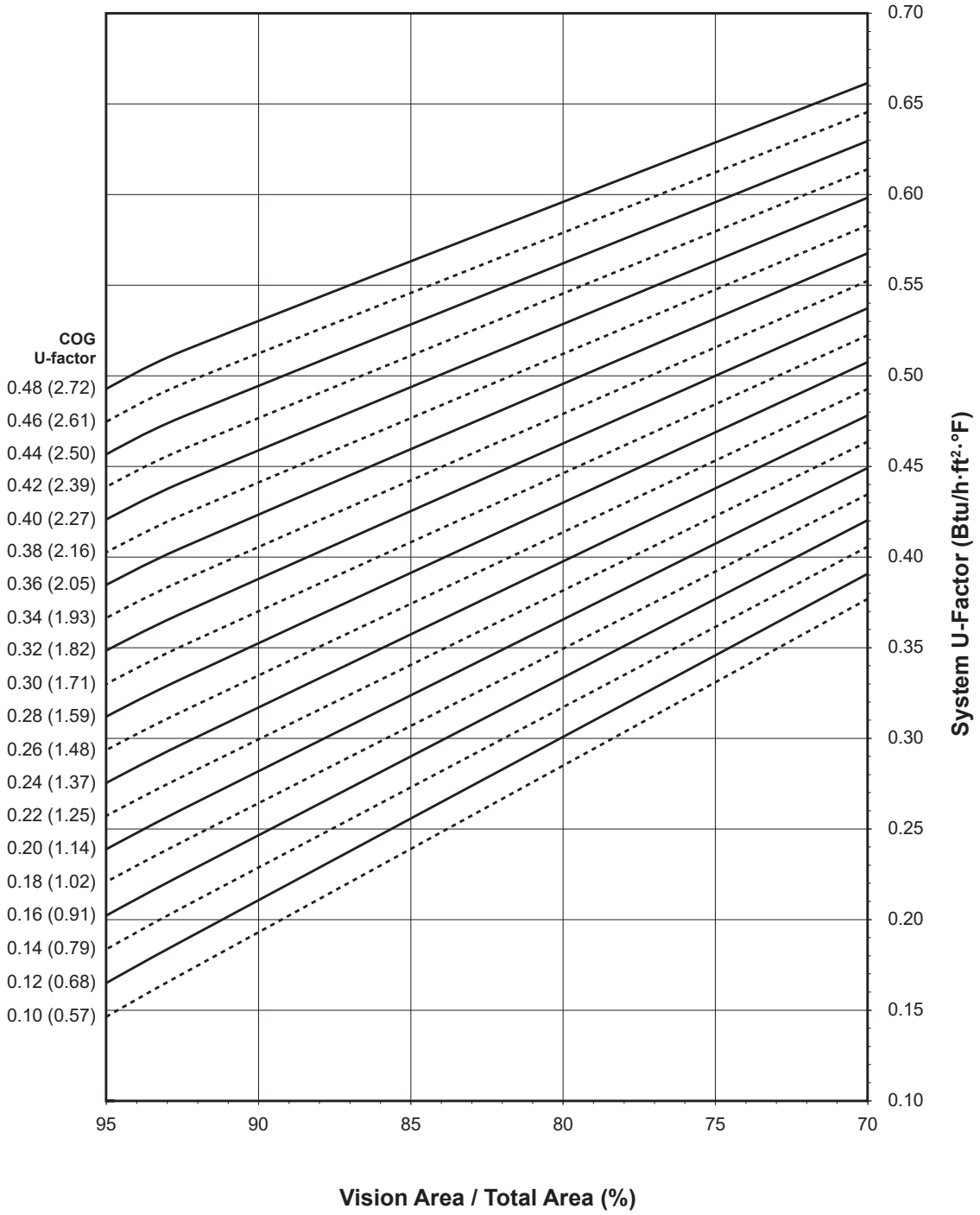

Aluminum Pressure Plate
1" Double Glazed - Warm-Edge Glazing Spacer

System Solar Heat Gain Coefficient (SHGC) vs Percent of Vision Area

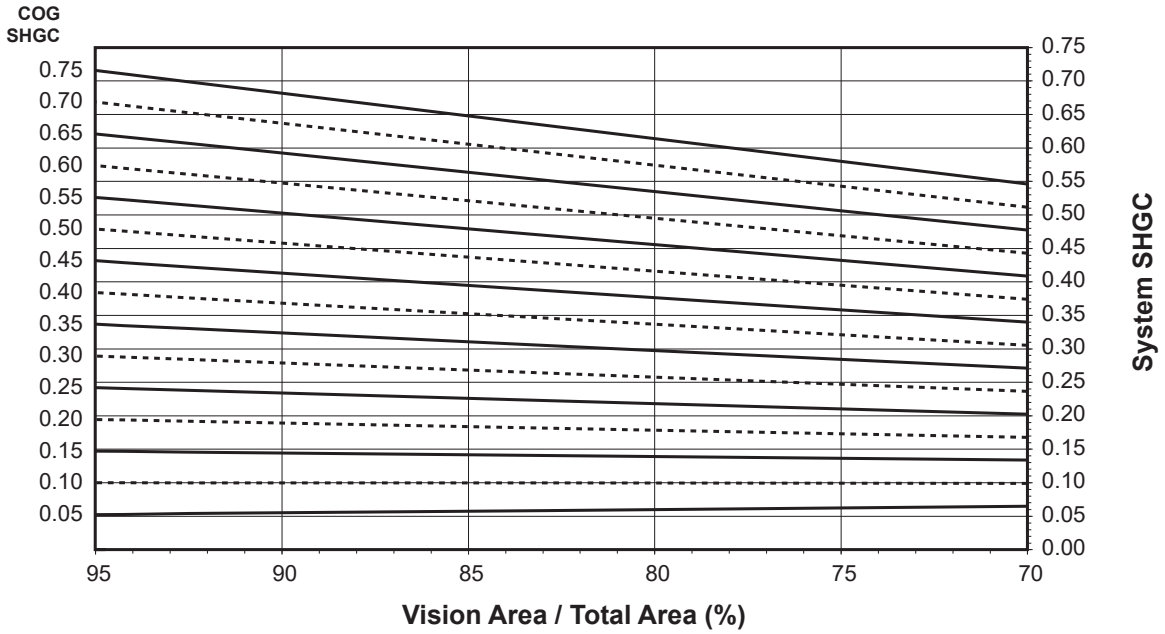

Charts are generated per AAMA 507.

System Visible Transmittance (VT) vs Percent of Vision Area

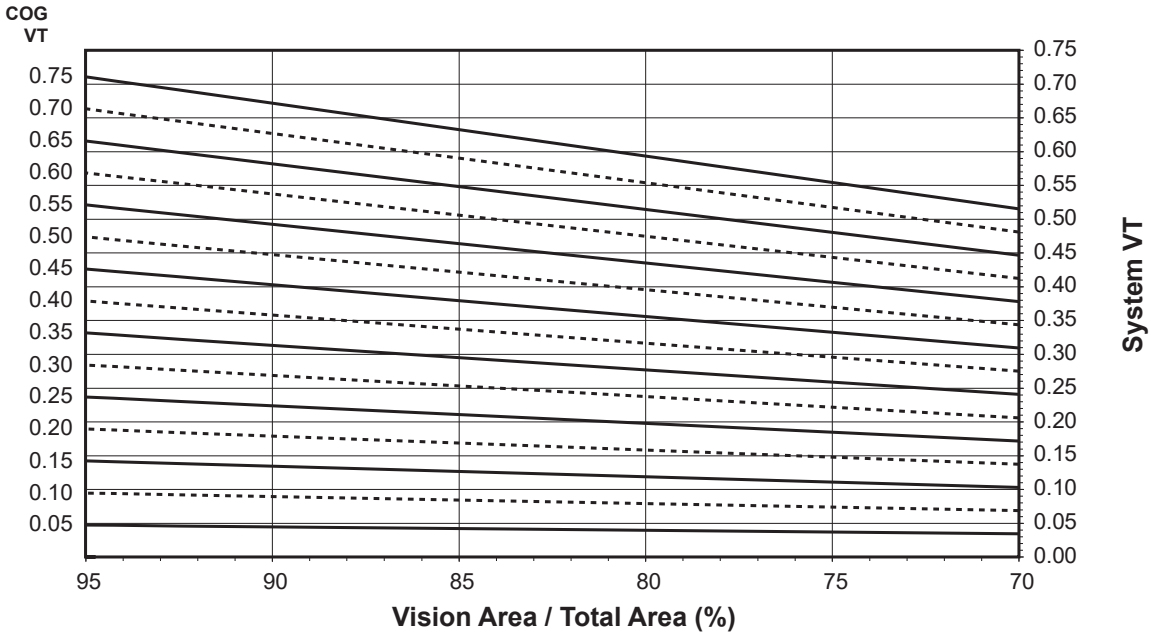

Charts are generated per AAMA 507.

Thermal Transmittance [1] (BTU/hr • ft [2] • °F)

Glass U-Factor [3]	Overall U-Factor [4]
0.48	0.51
0.46	0.50
0.44	0.48
0.42	0.46
0.40	0.44
0.38	0.42
0.36	0.41
0.34	0.39
0.32	0.37
0.30	0.35
0.28	0.33
0.26	0.31
0.24	0.30
0.22	0.28
0.20	0.26
0.18	0.24
0.16	0.22
0.14	0.21
0.12	0.19
0.10	0.17

Aluminum Pressure Plate
1" Double Glazed
Warm-Edge Glazing Spacer

NOTE: For glass values that are not listed, linear interpolation is permitted.

1. U-Factors are determined in accordance with NFRC 100.
2. SHGC and VT values are determined in accordance with NFRC 200.
3. Glass properties are based on center of glass values and are obtained from your glass supplier.
4. Overall U-Factor, SHGC, and VT Matricies are based on the standard NFRC specimen size of 2,000 mm wide by 2,000 mm high (78-3/4" by 78-3/4").

SHGC Matrix [2]

Glass SHGC [3]	Overall SHGC [4]
0.75	0.70
0.70	0.65
0.65	0.61
0.60	0.56
0.55	0.51
0.50	0.47
0.45	0.42
0.40	0.38
0.35	0.33
0.30	0.28
0.25	0.24
0.20	0.19
0.15	0.15
0.10	0.10
0.05	0.05

Visible Transmittance [2]

Glass VT [3]	Overall VT [4]
0.75	0.69
0.70	0.65
0.65	0.60
0.60	0.55
0.55	0.51
0.50	0.46
0.45	0.41
0.40	0.37
0.35	0.32
0.30	0.28
0.25	0.23
0.20	0.18
0.15	0.14
0.10	0.09
0.05	0.05

Aluminum Pressure Plate
1" Double Glazed - Aluminum Glazing Spacer

Note:
Values in parentheses are metric.
COG=Center of Glass.
Charts are generated per AAMA 507.

System U-Factor for Vision Glass

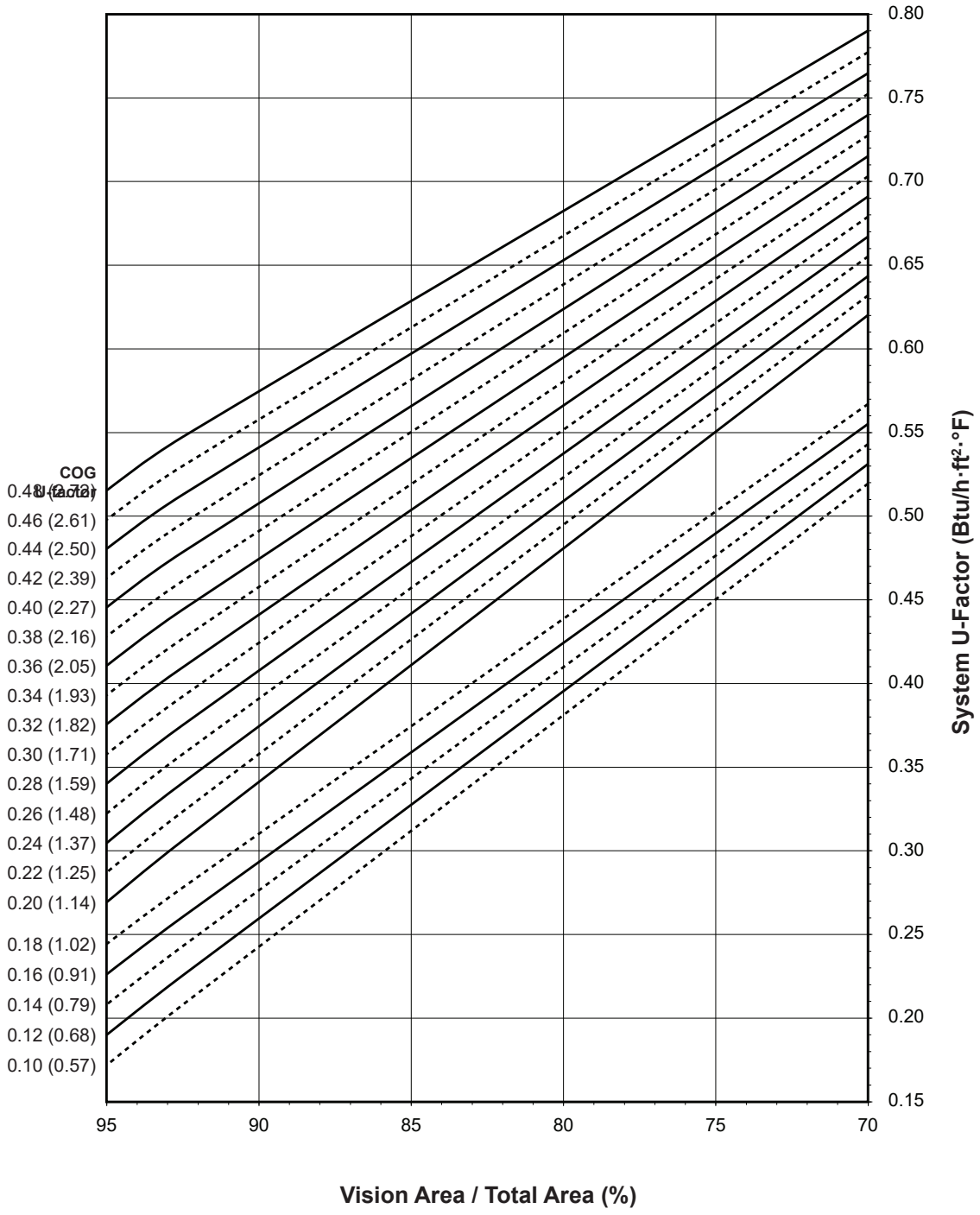

Aluminum Pressure Plate
1" Double Glazed - Aluminum Glazing Spacer

System Solar Heat Gain Coefficient (SHGC) vs Percent of Vision Area

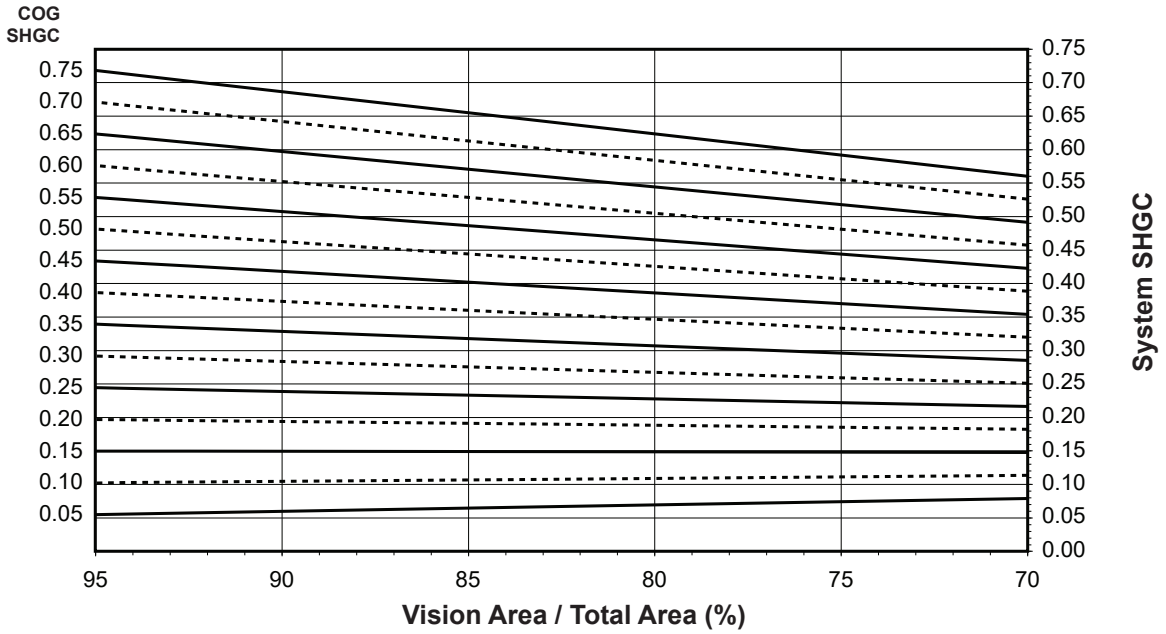

Charts are generated per AAMA 507.

System Visible Transmittance (VT) vs Percent of Vision Area

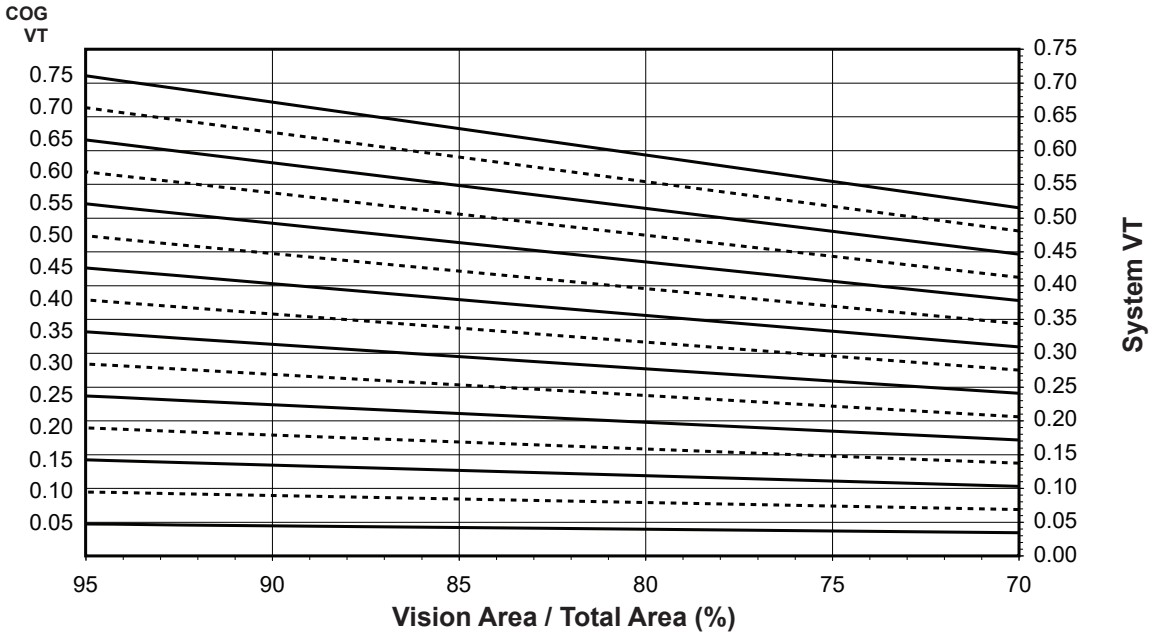

Charts are generated per AAMA 507.

Thermal Transmittance [1] (BTU/hr • ft [2] • °F)

Glass U-Factor [3]	Overall U-Factor [4]
0.48	0.55
0.46	0.53
0.44	0.51
0.42	0.50
0.40	0.48
0.38	0.46
0.36	0.44
0.34	0.43
0.32	0.41
0.30	0.39
0.28	0.38
0.26	0.36
0.24	0.34
0.22	0.32
0.20	0.31
0.18	0.28
0.16	0.26
0.14	0.24
0.12	0.23
0.10	0.21

Aluminum Pressure Plate
1" Double Glazed
Aluminum Glazing Spacer

NOTE: For glass values that are not listed, linear interpolation is permitted.

1. U-Factors are determined in accordance with NFRC 100.
2. SHGC and VT values are determined in accordance with NFRC 200.
3. Glass properties are based on center of glass values and are obtained from your glass supplier.
4. Overall U-Factor, SHGC, and VT Matricies are based on the standard NFRC specimen size of 2,000 mm wide by 2,000 mm high (78-3/4" by 78-3/4").

SHGC Matrix [2]

Glass SHGC [3]	Overall SHGC [4]
0.75	0.70
0.70	0.66
0.65	0.61
0.60	0.56
0.55	0.52
0.50	0.47
0.45	0.43
0.40	0.38
0.35	0.33
0.30	0.29
0.25	0.24
0.20	0.20
0.15	0.15
0.10	0.10
0.05	0.06

Visible Transmittance [2]

Glass VT [3]	Overall VT [4]
0.75	0.69
0.70	0.65
0.65	0.60
0.60	0.55
0.55	0.51
0.50	0.46
0.45	0.41
0.40	0.37
0.35	0.32
0.30	0.28
0.25	0.23
0.20	0.18
0.15	0.14
0.10	0.09
0.05	0.05

Fiberglass Pressure Plate
1" Double Glazed - Warm-Edge Glazing Spacer

Note:
Values in parentheses are metric.
COG = Center of Glass.
Charts are generated per AAMA 507

System U-Factor for Vision Glass

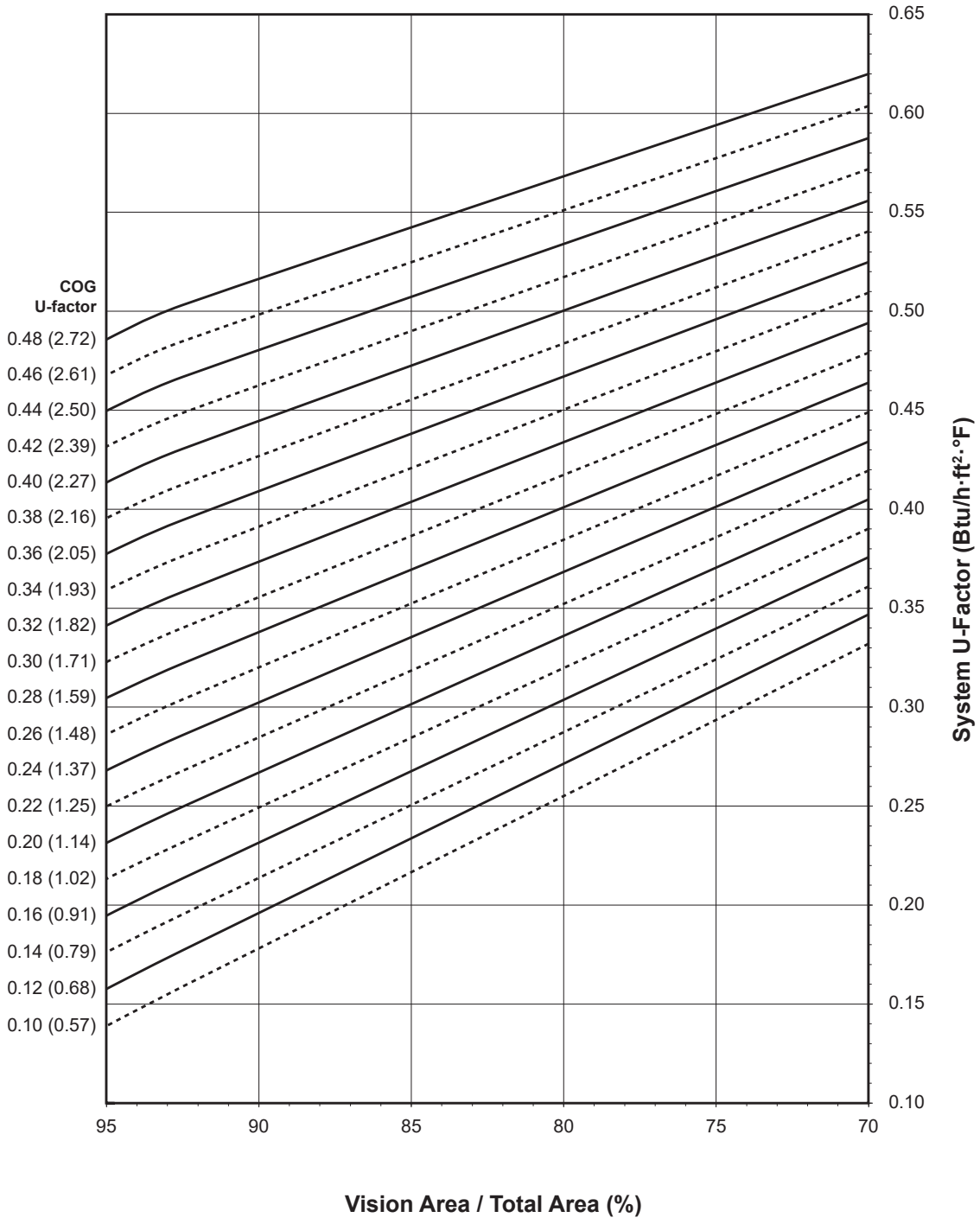

Notes for System U-factor, SHGC and VT charts:
For glass values that are not listed, linear interpolation is permitted.
Glass properties are based on center of glass values and are obtained from your glass supplier.

Fiberglass Pressure Plate
1" Double Glazed - Warm-Edge Glazing Spacer

System Solar Heat Gain Coefficient (SHGC) vs Percent of Vision Area

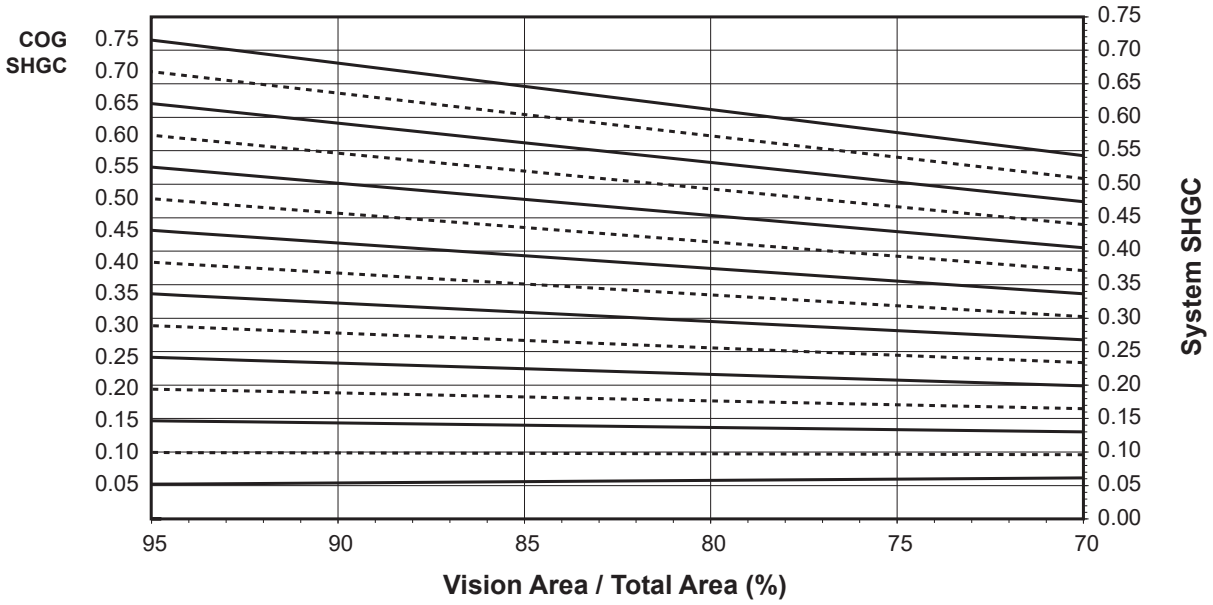

System Visible Transmittance (VT) vs Percent of Vision Area

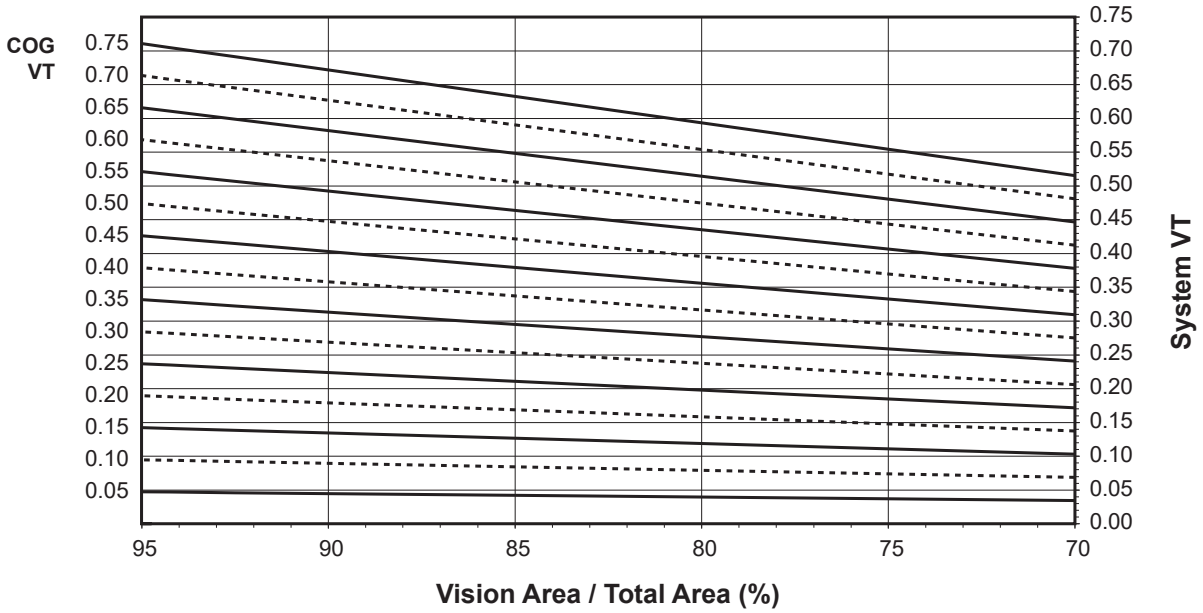

Thermal Transmittance [1] (BTU/hr • ft [2] • °F)

Glass U-Factor [3]	Overall U-Factor [4]
0.48	0.50
0.46	0.48
0.44	0.47
0.42	0.45
0.40	0.43
0.38	0.41
0.36	0.39
0.34	0.38
0.32	0.36
0.30	0.34
0.28	0.32
0.26	0.30
0.24	0.29
0.22	0.27
0.20	0.25
0.18	0.23
0.16	0.21
0.14	0.20
0.12	0.18
0.10	0.16

Fiberglass Pressure Plate
1" Double Glazed
Warm-Edge Glazing Spacer

NOTE: For glass values that are not listed, linear interpolation is permitted.

1. U-Factors are determined in accordance with NFRC 100.
2. SHGC and VT values are determined in accordance with NFRC 200.
3. Glass properties are based on center of glass values and are obtained from your glass supplier.
4. Overall U-Factor, SHGC, and VT Matricies are based on the standard NFRC specimen size of 2,000 mm wide by 2,000 mm high (78-3/4" by 78-3/4").

SHGC Matrix [2]

Glass SHGC [3]	Overall SHGC [4]
0.75	0.70
0.70	0.65
0.65	0.61
0.60	0.56
0.55	0.51
0.50	0.47
0.45	0.42
0.40	0.38
0.35	0.33
0.30	0.28
0.25	0.24
0.20	0.19
0.15	0.15
0.10	0.10
0.05	0.05

Visible Transmittance [2]

Glass VT [3]	Overall VT [4]
0.75	0.69
0.70	0.65
0.65	0.60
0.60	0.55
0.55	0.51
0.50	0.46
0.45	0.41
0.40	0.37
0.35	0.32
0.30	0.28
0.25	0.23
0.20	0.18
0.15	0.14
0.10	0.09
0.05	0.05

Fiberglass Pressure Plate
1" Double Glazed - Aluminum Glazing Spacer

Note:
Values in parentheses are metric.
COG = Center of Glass.
Charts are generated per AAMA 507

System U-Factor for Vision Glass

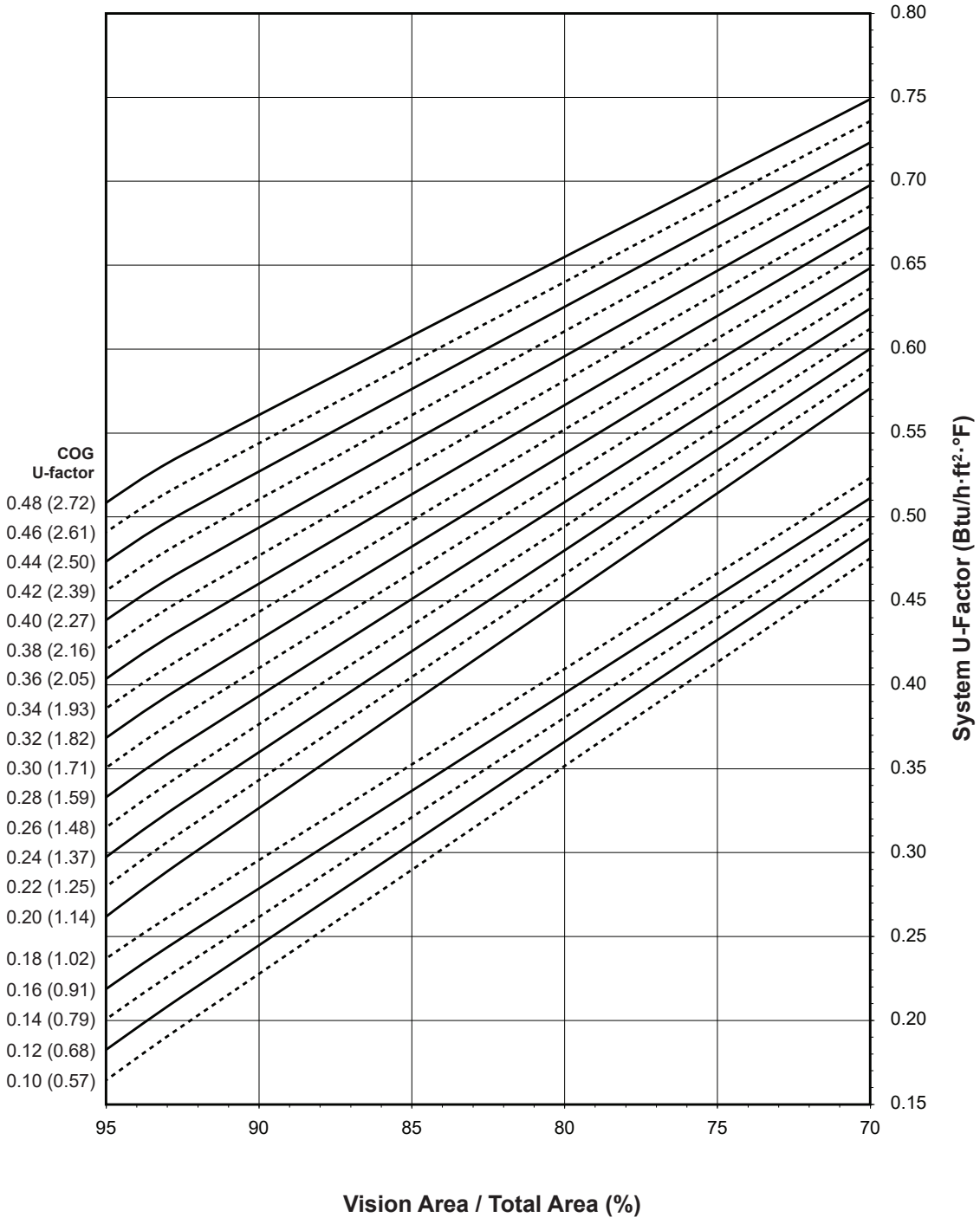

Notes for System U-factor, SHGC and VT charts:
For glass values that are not listed, linear interpolation is permitted.
Glass properties are based on center of glass values and are obtained from your glass supplier.

Fiberglass Pressure Plate
1" Double Glazed - Aluminum Glazing Spacer

System Solar Heat Gain Coefficient (SHGC) vs Percent of Vision Area

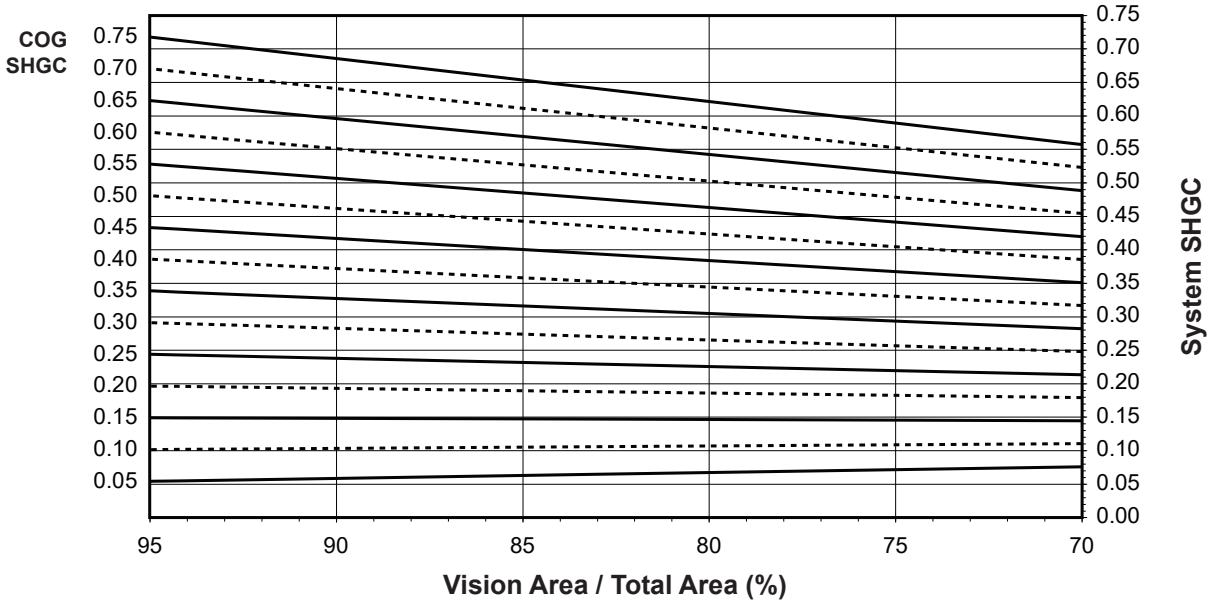

System Visible Transmittance (VT) vs Percent of Vision Area

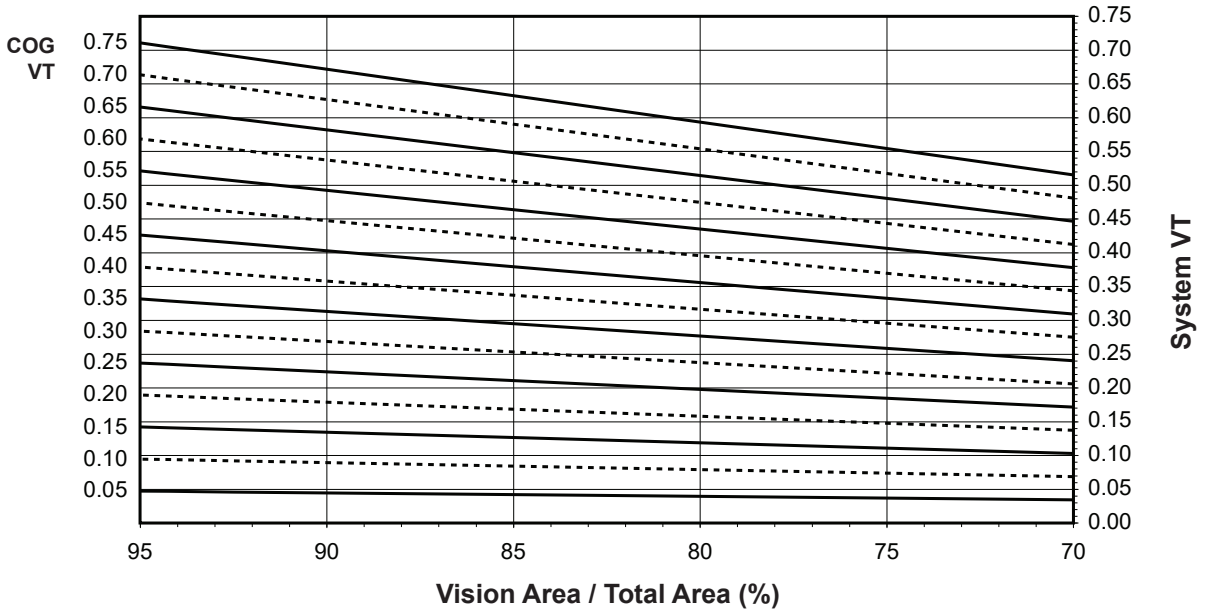

Thermal Transmittance [1] (BTU/hr • ft [2] • °F)

Glass U-Factor [3]	Overall U-Factor [4]
0.48	0.54
0.46	0.52
0.44	0.50
0.42	0.49
0.40	0.47
0.38	0.45
0.36	0.43
0.34	0.42
0.32	0.40
0.30	0.38
0.28	0.36
0.26	0.35
0.24	0.33
0.22	0.31
0.20	0.30
0.18	0.27
0.16	0.25
0.14	0.23
0.12	0.21
0.10	0.20

Fiberglass Pressure Plate
1" Double Glazed
Aluminum Glazing Spacer

NOTE: For glass values that are not listed, linear interpolation is permitted.

1. U-Factors are determined in accordance with NFRC 100.
2. SHGC and VT values are determined in accordance with NFRC 200.
3. Glass properties are based on center of glass values and are obtained from your glass supplier.
4. Overall U-Factor, SHGC, and VT Matricies are based on the standard NFRC specimen size of 2,000 mm wide by 2,000 mm high (78-3/4" by 78-3/4").

SHGC Matrix [2]

Glass SHGC [3]	Overall SHGC [4]
0.75	0.70
0.70	0.66
0.65	0.61
0.60	0.56
0.55	0.52
0.50	0.47
0.45	0.43
0.40	0.38
0.35	0.33
0.30	0.29
0.25	0.24
0.20	0.19
0.15	0.15
0.10	0.10
0.05	0.06

Visible Transmittance [2]

Glass VT [3]	Overall VT [4]
0.75	0.69
0.70	0.65
0.65	0.60
0.60	0.55
0.55	0.51
0.50	0.46
0.45	0.41
0.40	0.37
0.35	0.32
0.30	0.28
0.25	0.23
0.20	0.18
0.15	0.14
0.10	0.09
0.05	0.05

Aluminum Pressure Plate
1-3/4" Triple Glazed - Warm-Edge Glazing Spacer

Note:
Values in parentheses are metric.
COG = Center of Glass.
Charts are generated per AAMA 507

System U-Factor for Vision Glass

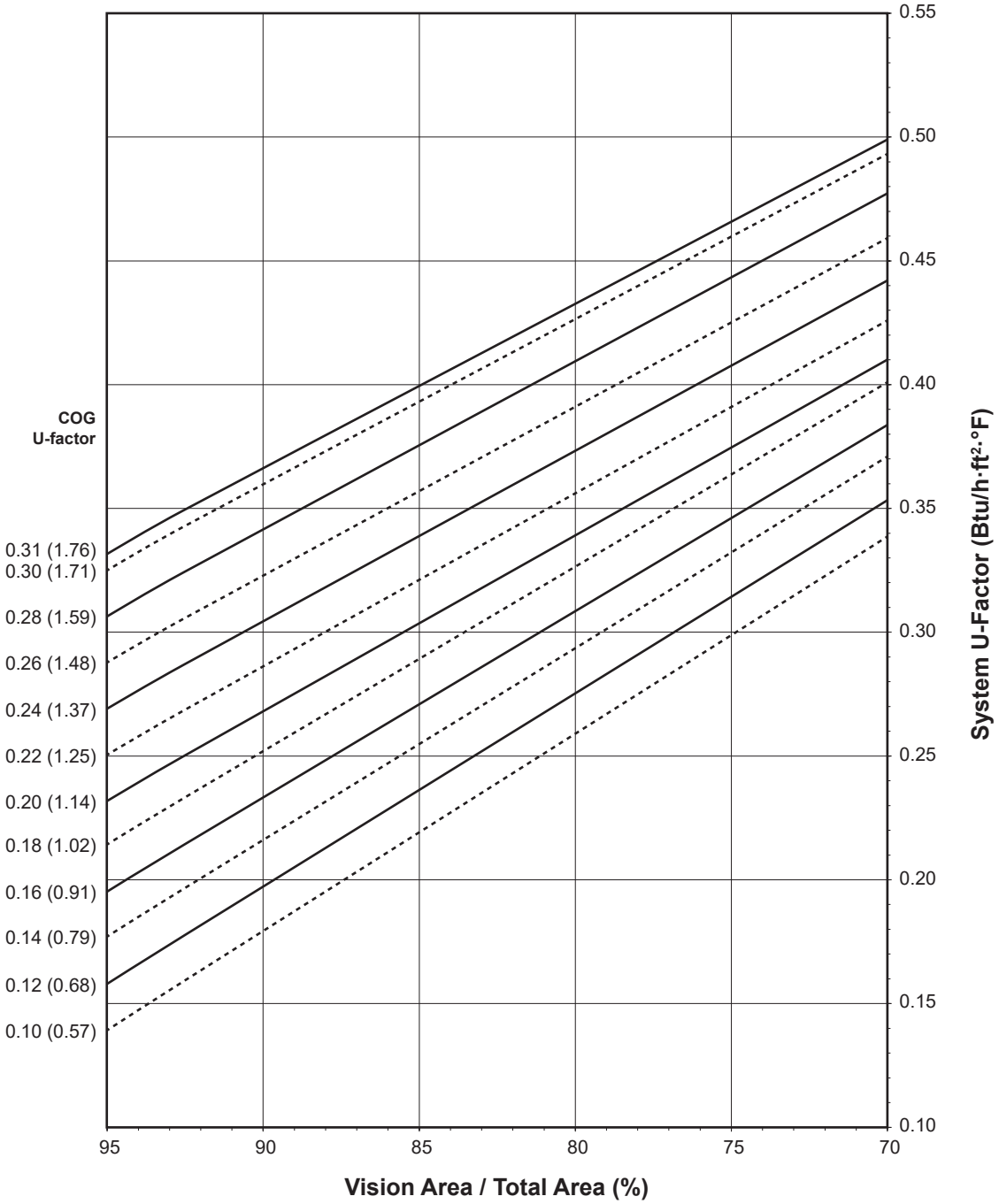

Notes for System U-Factor, SHGC and VT charts:
For glass values that are not listed, linear interpolation is permitted.
Glass properties are based on center of glass values (winter conditions) and are obtained from your glass supplier.

Aluminum Pressure Plate
1-3/4" Triple Glazed - Warm-Edge Glazing Spacer

System Solar Heat Gain Coefficient (SHGC) vs Percent of Vision Area

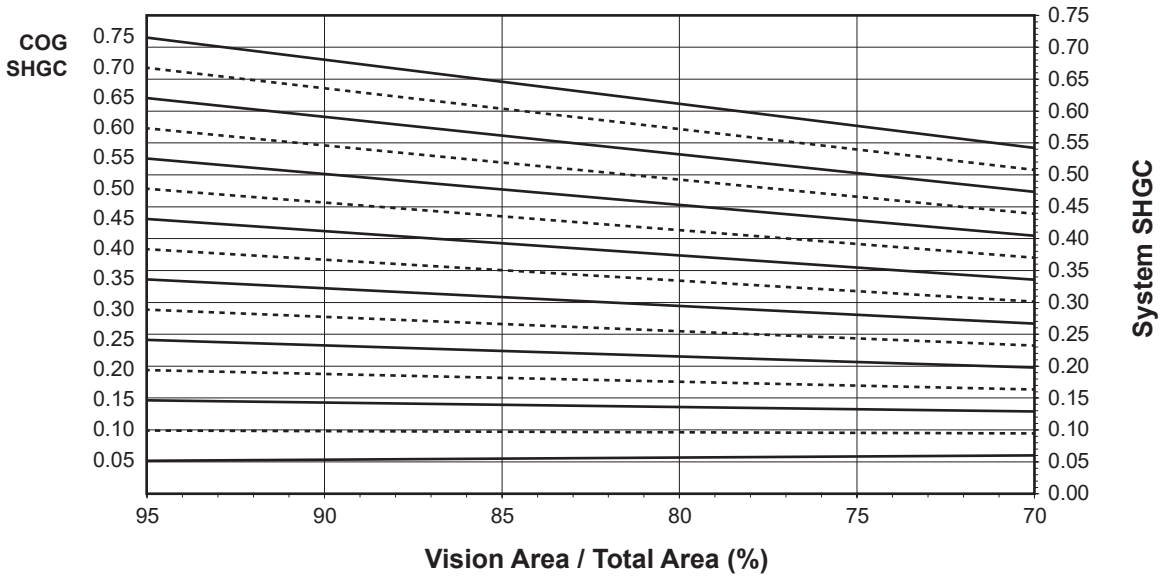

Charts are generated per AAMA 507.

System Visible Transmittance (VT) vs Percent of Vision Area

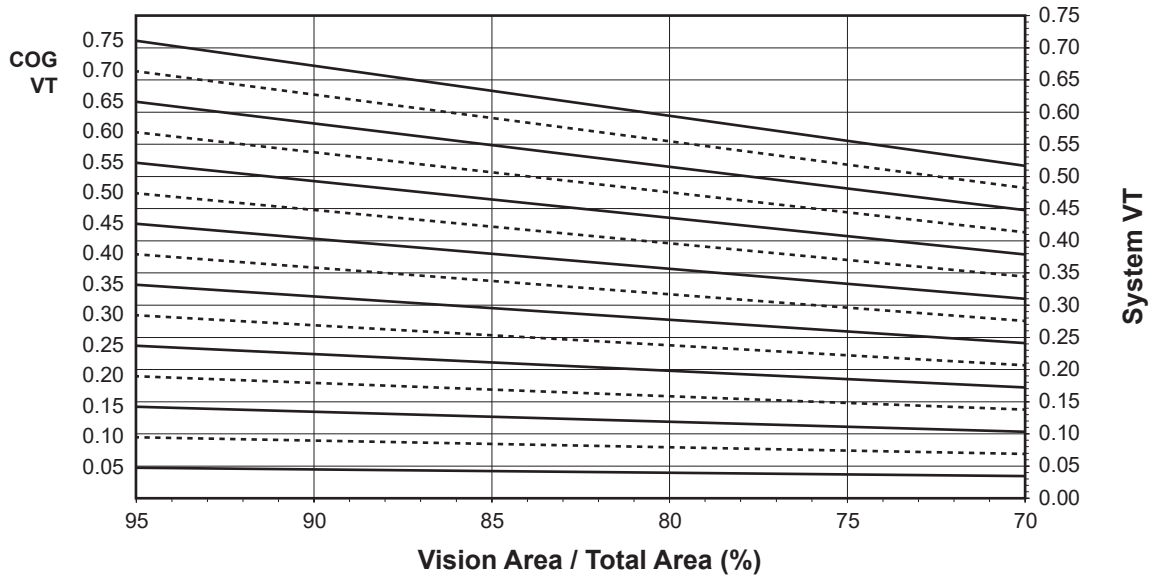

Charts are generated per AAMA 507.

Thermal Transmittance [1] (BTU/hr • ft [2] • °F)

Glass U-Factor [3]	Overall U-Factor [4]
0.31	0.35
0.30	0.34
0.28	0.32
0.26	0.31
0.24	0.29
0.22	0.27
0.20	0.25
0.18	0.23
0.16	0.21
0.14	0.20
0.12	0.18
0.10	0.16

Aluminum Pressure Plate 1-3/4" Triple Glazed Warm-Edge Glazing Spacer

NOTE: For glass values that are not listed, linear interpolation is permitted.

1. U-Factors are determined in accordance with NFRC 100.
2. SHGC and VT values are determined in accordance with NFRC 200.
3. Glass properties are based on center of glass values and are obtained from your glass supplier.
4. Overall U-Factor, SHGC, and VT Matricies are based on the standard NFRC specimen size of 2,000 mm wide by 2,000 mm high (78-3/4" by 78-3/4").

SHGC Matrix [2]

Glass SHGC [3]	Overall SHGC [4]
0.75	0.70
0.70	0.65
0.65	0.61
0.60	0.56
0.55	0.51
0.50	0.47
0.45	0.42
0.40	0.38
0.35	0.33
0.30	0.28
0.25	0.24
0.20	0.19
0.15	0.14
0.10	0.10
0.05	0.05

Visible Transmittance [2]

Glass VT [3]	Overall VT [4]
0.75	0.69
0.70	0.65
0.65	0.60
0.60	0.55
0.55	0.51
0.50	0.46
0.45	0.41
0.40	0.37
0.35	0.32
0.30	0.28
0.25	0.23
0.20	0.18
0.15	0.14
0.10	0.09
0.05	0.05

Fiberglass Pressure Plate
1-3/4" Triple Glazed - Warm-Edge Glazing Spacer

Note:
Values in parentheses are metric.
COG = Center of Glass.
Charts are generated per AAMA 507

System U-Factor for Vision Glass

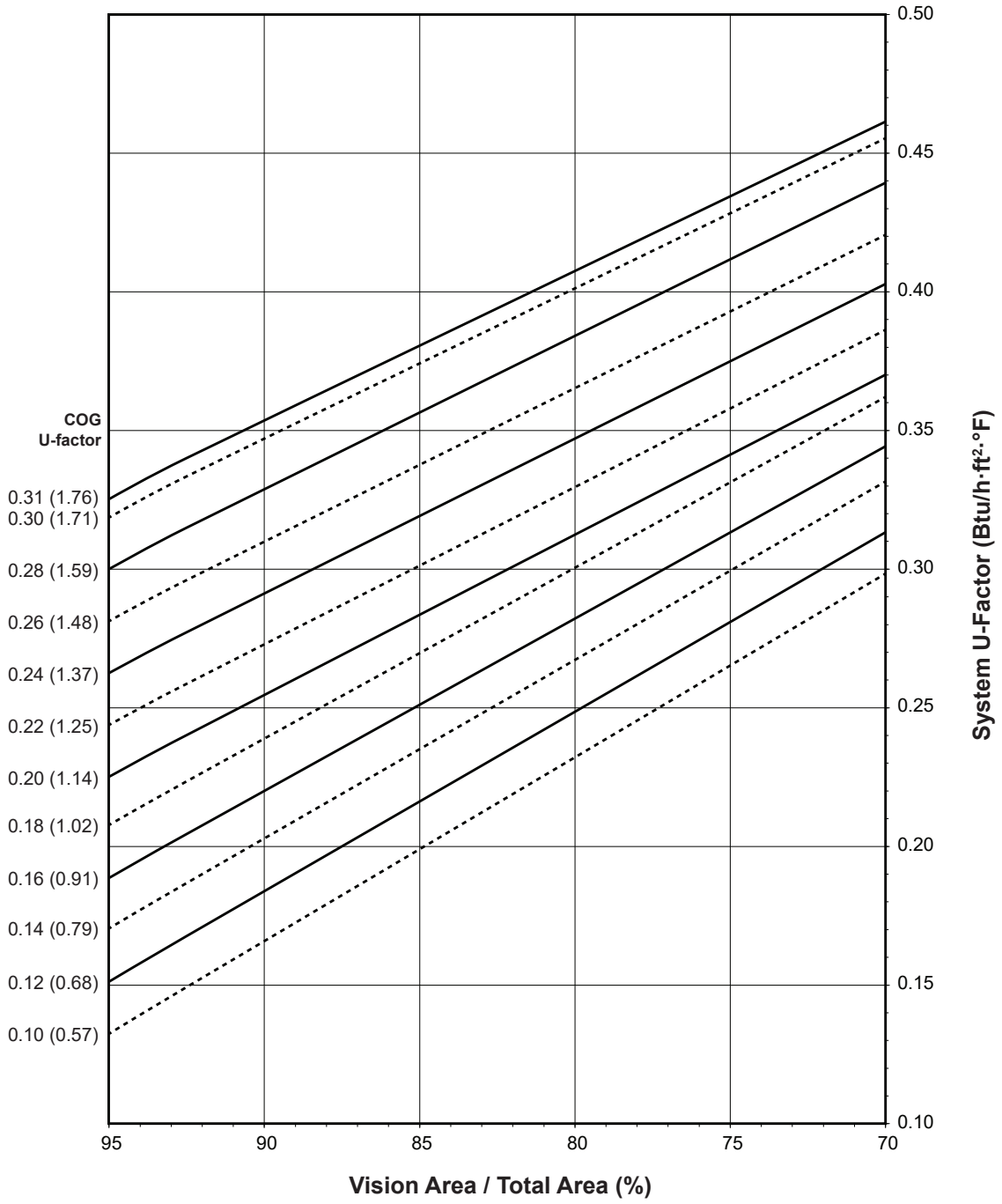

Notes for System U-Factor, SHGC and VT charts:
For glass values that are not listed, linear interpolation is permitted.
Glass properties are based on center of glass values (winter conditions) and are obtained from your glass supplier.

Fiberglass Pressure Plate
1-3/4" Triple Glazed - Warm-Edge Glazing Spacer

System Solar Heat Gain Coefficient (SHGC) vs Percent of Vision Area

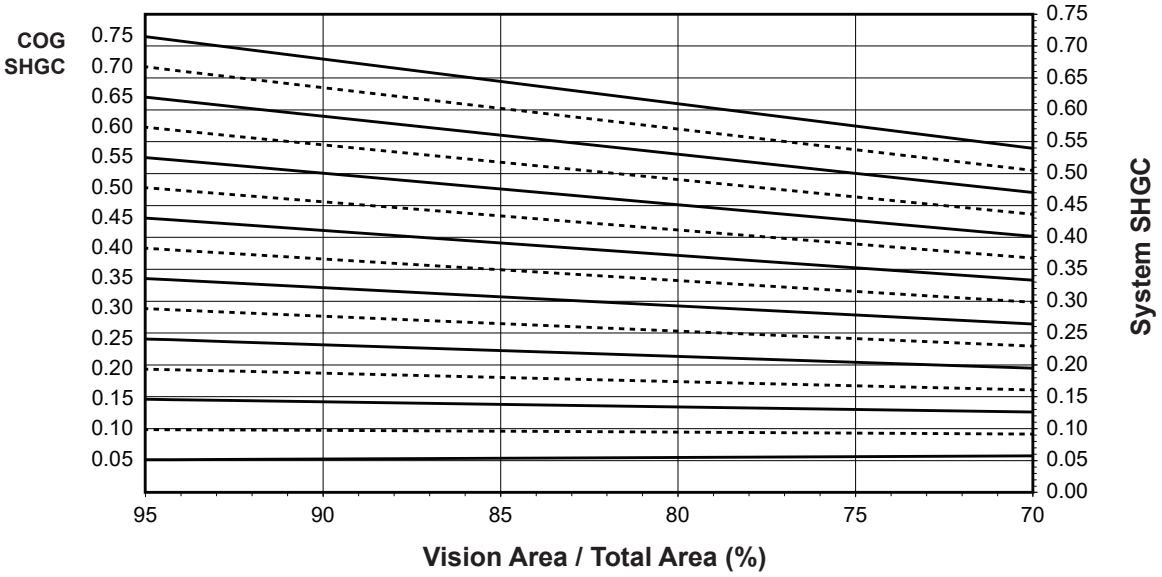

Charts are generated per AAMA 507.

System Visible Transmittance (VT) vs Percent of Vision Area

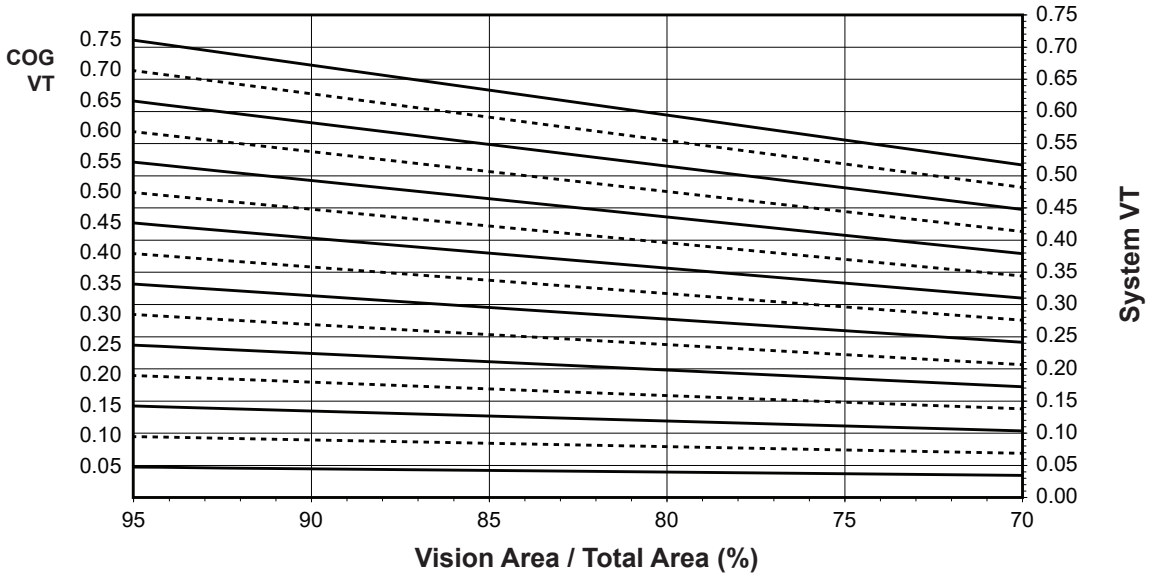

Charts are generated per AAMA 507.

Thermal Transmittance [1] (BTU/hr • ft [2] • °F)

Glass U-Factor [3]	Overall U-Factor [4]
0.31	0.34
0.30	0.33
0.28	0.31
0.26	0.30
0.24	0.28
0.22	0.26
0.20	0.24
0.18	0.22
0.16	0.20
0.14	0.19
0.12	0.17
0.10	0.15

Fiberglass Pressure Plate
1-3/4" Triple Glazed
Warm-Edge Glazing Spacer

NOTE: For glass values that are not listed, linear interpolation is permitted.

1. U-Factors are determined in accordance with NFRC 100.
2. SHGC and VT values are determined in accordance with NFRC 200.
3. Glass properties are based on center of glass values and are obtained from your glass supplier.
4. Overall U-Factor, SHGC, and VT Matricies are based on the standard NFRC specimen size of 2,000 mm wide by 2,000 mm high (78-3/4" by 78-3/4").

SHGC Matrix [2]

Glass SHGC [3]	Overall SHGC [4]
0.75	0.70
0.70	0.65
0.65	0.60
0.60	0.56
0.55	0.51
0.50	0.47
0.45	0.42
0.40	0.37
0.35	0.33
0.30	0.28
0.25	0.24
0.20	0.19
0.15	0.14
0.10	0.10
0.05	0.05

Visible Transmittance [2]

Glass VT [3]	Overall VT [4]
0.75	0.69
0.70	0.65
0.65	0.60
0.60	0.55
0.55	0.51
0.50	0.46
0.45	0.41
0.40	0.37
0.35	0.32
0.30	0.28
0.25	0.23
0.20	0.18
0.15	0.14
0.10	0.09
0.05	0.05

CONDENSATION RESISTANCE

Glazing Infill	Pressure Plate Type	Condensation Resistance Factor (CRF) AAMA 1503		Temperature Index (TI) CSA A440-0	
		Frame	Glass	Frame	Glass
1" Double	Aluminum	81	73	75	67
	Fiberglass	80	73	75	67
1-3/4" Triple	Aluminum	82	75	73	67