GLASSVENT® UT WINDOW

Architectural Detail Manual

May 2026

ADME077EN

KAWNEER

This page is intentionally left blank.

Table of Contents

Introduction 7
Contacting Kawneer 7
Conventions Used in this Document 7

Product Overview 8
Features 8

Project-Out Window 9
Project-Out Window - 1" Infill 9
CW (Shallow) - Project-Out Window - 1" Infill 10
AW (Deep) - Project-Out Window - 1" Infill 11
Project-Out Window - 1-3/4" Infill 12
CW (Shallow) - Project-Out Window - 1-3/4" Infill 13
AW (Deep) - Project-Out Window - 1-3/4" Infill 14
Accessories - Project-Out Window 15

Outswing Casement Window 16
Outswing Casement Window - 1" Infill 16
CW (Shallow) - Outswing Casement Window - 1" Infill 17
AW (Deep) - Outswing Casement Window - 1" Infill 18
Outswing Casement Window - 1-3/4" Infill 19
CW (Shallow) - Outswing Casement Window - 1-3/4" Infill 20
AW (Deep) - Outswing Casement Window - 1-3/4" Infill 21
Accessories - Outswing Casement Window 22

Thermal Performance 23
Example of Generic Project-Specific U-Factor Calculation 23
Glass Area Chart 24
AW (Deep) - Project-Out Window with 1" Glazing (Warm-Edge Glazing Spacer) 25
System U-factor for Glass Area 25
AW (Deep) - Project-Out Window with 1" Glazing 26
System Solar Heat Gain Coefficient (SHGC) - AW (Deep) - Project-Out Window with 1" Glazing 27
System Visible Transmittance (VT) - AW (Deep) - Project-Out Window with 1" Glazing 28
AW (Deep) - Project-Out Window with 1-3/4" Glazing (Warm-Edge Glazing Spacer) 29
System U-factor for Glass Area 29
AW (Deep) - Project-Out Window with 1-3/4" Glazing 30
System Solar Heat Gain Coefficient (SHGC) - AW (Deep) - Project-Out Window with 1-3/4" Glazing 31
System Visible Transmittance (VT) - AW (Deep) - Project-Out Window with 1-3/4" Glazing 32
AW (Deep) - Outswing Casement Window with 1" Glazing (Warm-Edge Glazing Spacer) 33
System U-factor for Glass Area 33
AW (Deep) - Outswing Casement Window with 1" Glazing 34
System Solar Heat Gain Coefficient (SHGC) - AW (Deep) - Outswing Casement Window with 1" Glazing 35

Laws and building and safety codes governing the design and use of Kawneer products vary widely. Kawneer does not control the selection of its products and assumes no responsibility therefor. See full disclaimer at end of document.
© 2020, Kawneer Company, Inc.

System Visible Transmittance (VT) - AW (Deep) - Outswing Casement Window with 1" Glazing 36
AW (Deep) - Outswing Casement Window with 1-3/4" Glazing (Warm-Edge Glazing Spacer) .. 37
System U-factor for Glass Area 37
AW (Deep) - Outswing Casement Window with 1-3/4" Glazing 38
System Solar Heat Gain Coefficient (SHGC) - AW (Deep) - Outswing Casement Window with 1-3/4" Glazing 39
System Visible Transmittance (VT) - AW (Deep) - Outswing Casement Window with 1-3/4" Glazing 40
AW (Deep) - Project-Out Window with 1" Glazing (Aluminum Glazing Spacer) 41
System U-factor for Glass Area 41
AW (Deep) - Project-Out Window with 1" Glazing 42
System Solar Heat Gain Coefficient (SHGC) - AW (Deep) - Project-Out Window with 1" Glazing 43
System Visible Transmittance (VT) - AW (Deep) - Project-Out Window with 1" Glazing 44
AW (Deep) - Project-Out Window with 1-3/4" Glazing (Aluminum Glazing Spacer) 45
System U-factor for Glass Area 45
AW (Deep) - Project-Out Window with 1-3/4" Glazing 46
System Solar Heat Gain Coefficient (SHGC) - AW (Deep) - Project-Out Window with 1-3/4" Glazing 47
System Visible Transmittance (VT) - AW (Deep) - Project-Out Window with 1-3/4" Glazing 48
AW (Deep) - Outswing Casement Window with 1" Glazing (Aluminum Glazing Spacer) 49
System U-factor for Glass Area 49
AW (Deep) - Outswing Casement Window with 1" Glazing 50
System Solar Heat Gain Coefficient (SHGC) - AW (Deep) - Outswing Casement Window with 1" Glazing 51
System Visible Transmittance (VT) - AW (Deep) - Outswing Casement Window with 1" Glazing 52
AW (Deep) - Outswing Casement Window with 1-3/4" Glazing (Aluminum Glazing Spacer) 53
System U-factor for Glass Area 53
AW (Deep) - Outswing Casement Window with 1-3/4" Glazing 54
System Solar Heat Gain Coefficient (SHGC) - AW (Deep) - Outswing Casement Window with 1-3/4" Glazing 55
System Visible Transmittance (VT) - AW (Deep) - Outswing Casement Window with 1-3/4" Glazing 56
CW (Shallow) - Project-Out Window with 1" Glazing (Aluminum Glazing Spacer) 57
System U-factor for Glass Area 57
CW (Shallow) - Project-Out Window with 1" Glazing 58
System Solar Heat Gain Coefficient (SHGC) - CW (Shallow) - Project-Out Window with 1" Glazing 59
System Visible Transmittance (VT) - CW (Shallow) - Project-Out Window with 1" Glazing 60
CW (Shallow) - Project-Out Window with 1-3/4" Glazing (Aluminum Glazing Spacer) 61
System U-factor for Glass Area 61
CW (Shallow) - Project-Out Window with 1-3/4" Glazing 62
System Solar Heat Gain Coefficient (SHGC) - CW (Shallow) - Project-Out Window with 1-3/4" Glazing 63

Laws and building and safety codes governing the design and use of Kawneer products vary widely. Kawneer does not control the selection of its products and assumes no responsibility therefor. See full disclaimer at end of document.
© 2020, Kawneer Company, Inc.

May, 2026
97911-351
ADME077EN

System Visible Transmittance (VT) - CW (Shallow) - Project-Out Window with 1-3/4" Glazing 64
CW (Shallow) - Outswing Casement Window with 1" Glazing (Aluminum Glazing Spacer) 65
System U-factor for Glass Area 65
CW (Shallow) - Outswing Casement Window with 1" Glazing 66
System Solar Heat Gain Coefficient (SHGC) - CW (Shallow) - Outswing Casement Window with 1" Glazing 67
System Visible Transmittance (VT) - CW (Shallow) - Outswing Casement Window with 1" Glazing 68
CW (Shallow) - Outswing Casement Window with 1-3/4" Glazing (Aluminum Glazing Spacer) 69
System U-factor for Glass Area 69
CW (Shallow) - Outswing Casement Window with 1-3/4" Glazing 70
System Solar Heat Gain Coefficient (SHGC) - CW (Shallow) - Outswing Casement Window with 1-3/4" Glazing 71
System Visible Transmittance (VT) - CW (Shallow) - Outswing Casement Window with 1-3/4" Glazing 72

Notes and Disclaimers 74

Laws and building and safety codes governing the design and use of Kawneer products vary widely. Kawneer does not control the selection of its products and assumes no responsibility therefor. See full disclaimer at end of document.
© 2020, Kawneer Company, Inc.

This page is intentionally left blank.

Introduction

Contacting Kawneer

For contact information, visit www.Kawneer.com.

Conventions Used in this Document

These symbols identify special types of information that can help you use the document more effectively.

Symbol	Description
NOTE	Denotes general information that provides additional context or guidance
IMPORTANT	Denotes information to which you should pay special attention
TIP	Denotes information that can help you perform a task more efficiently

Metric (SI) Conversion. Metric (SI) conversion figures are included throughout this document for reference. Numbers in parentheses ( ) are millimeters unless otherwise noted. The following metric (SI) units may also appear: m – meter; cm – centimeter; mm – millimeter; s – second; Pa – pascal; MPa – megapascal.

Laws and building and safety codes governing the design and use of Kawneer products vary widely. Kawneer does not control the selection of its products and assumes no responsibility therefor. See full disclaimer at end of document.
© 2020, Kawneer Company, Inc.

Product Overview

NOTE
Additional information and CAD details are available at .

NOTE
Additional information and CAD details are available at .

Features

For specific product applications, consult your Kawneer representative.

- Commercial Grade Window (CW) and Architectural Grade Window (AW)
- Tested to US and Canadian Standards
- 45° Mitered Vent and Frame Corners
- Staked Corner Joinery
- Architectural Anodized Finishes and Applied Coatings
- Large Missile and Small Missile Hurricane Impact Tested - AW (Deep) only
- Blast Mitigation Tested - AW (Deep) only

KAWNEER

Laws and building and safety codes governing the design and use of Kawneer products vary widely. Kawneer does not control the selection of its products and assumes no responsibility therefor. See full disclaimer at end of document.
© 2020, Kawneer Company, Inc.

May, 2026
97911-351
ADME077EN

Project-Out Window

Project-Out Window - 1" Infill

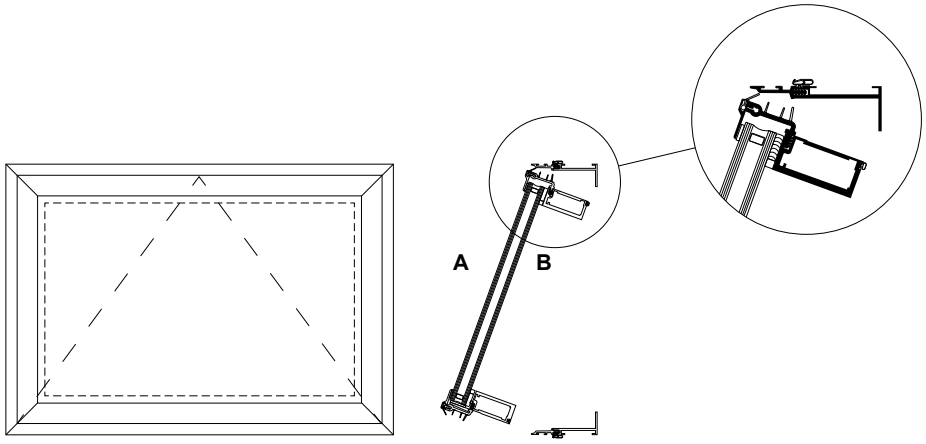

A. Exterior
B. Interior

CLASS and GRADE	CLASS CW-PG70-AP / AW-PG90-AP
TESTING STANDARD	AAMA / WDMA / CSA / 101 / I.S.2 / A440 (NAFS)
SYSTEM DEPTH	CW (Shallow) - 3-1/8" / AW (Deep) - 4-3/8" Overall System Depth
TYPICAL WALL THICKNESS	CW (Shallow) - .125 Nominal Frame / .100" Nominal Vent AW (Deep) -. 125 Nominal Frame / .156" Nominal Vent
TYPICAL MAX. VENT SIZE	CW (Shallow) - 48" x 32" / AW (Deep) - 60" x 36"
TYPICAL MIN. VENT SIZE	17" x 17"
INFILL OPTIONS	1"
STANDARD HARDWARE	Stainless Steel 4-Bar Hinges Cast White Bronze Cam Handles
OPTIONAL HARDWARE	Access Control Locks Hook Bolt Lock Pivot Shoe Roto-Operator (Size Limitations - Minimum 26" Wide x 17" High, Maximum 60" Wide x 36" High) (Verify with application engineering project specific limit stop requirements based on window size) Limit Stop (Verify with application engineering project specific limit stop requirements based on window size) Pole and Pole Ring • AW (Deep version 1" infill) • (Consult Application Engineering on project specific application)
OTHER OPTIONS	Insect Screens

Laws and building and safety codes governing the design and use of Kawneer products vary widely. Kawneer does not control the selection of its products and assumes no responsibility therefor. See full disclaimer at end of document.
© 2020, Kawneer Company, Inc.

CW (Shallow) - Project-Out Window - 1" Infill

Typical Elevation

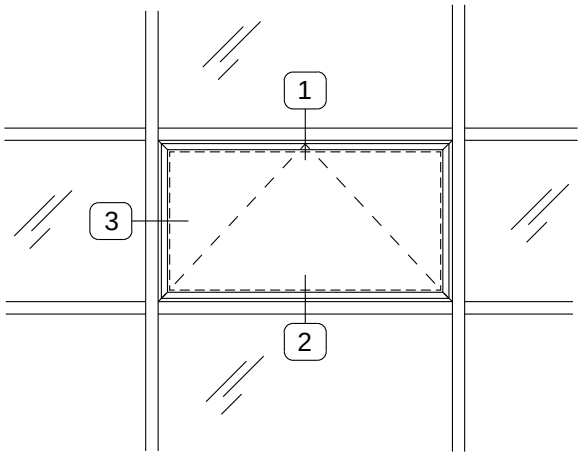

1 Head

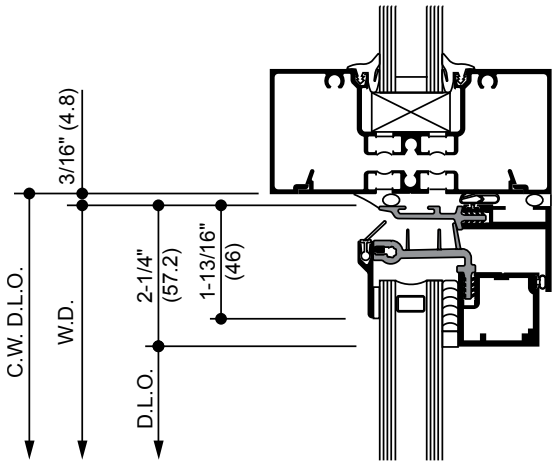

2 Sill

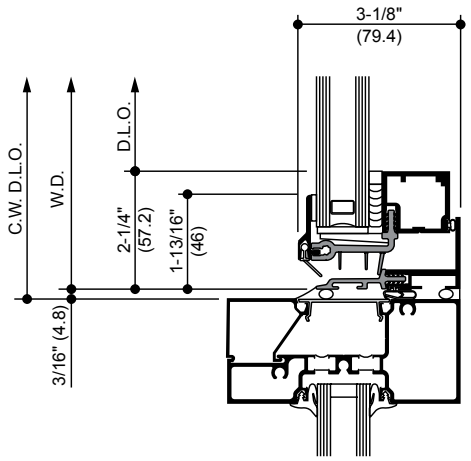

3 Jamb

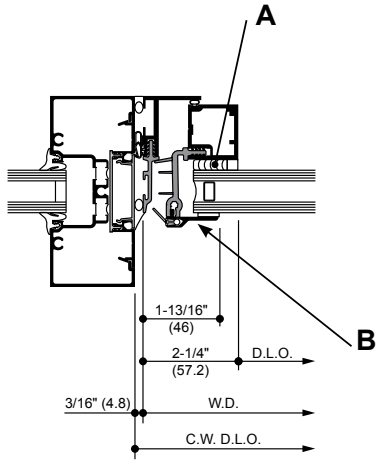

A. Structural Silicone Sealant (by Others)*
B. Trim Cap available in #29 Black anodized finish only.

NOTICE
* Installer is responsible for all required compatibility review and approvals with the Structural Silicone Manufacturer and the Insulating Glass Unit Manufacturer.

NOTE
The Kawneer GLASSvent® UT Window is shown with Trifab® 451UT Framing System for reference. Other Kawneer systems can be used. For product specific applications, consult your Kawneer representative.

Laws and building and safety codes governing the design and use of Kawneer products vary widely. Kawneer does not control the selection of its products and assumes no responsibility therefor. See full disclaimer at end of document.
© 2020, Kawneer Company, Inc.

AW (Deep) - Project-Out Window - 1" Infill

Typical Elevation

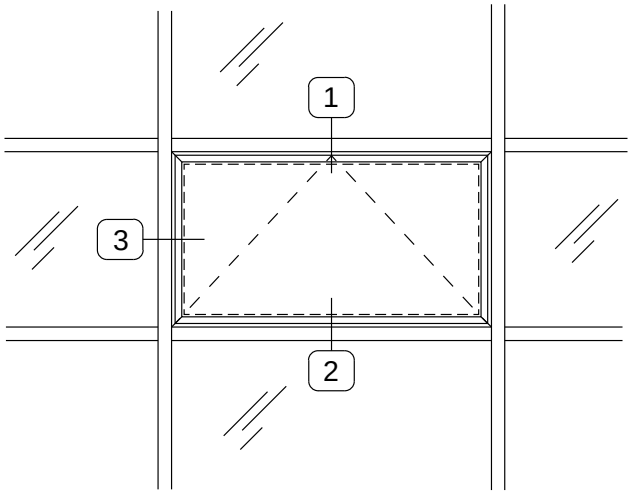

1 Head

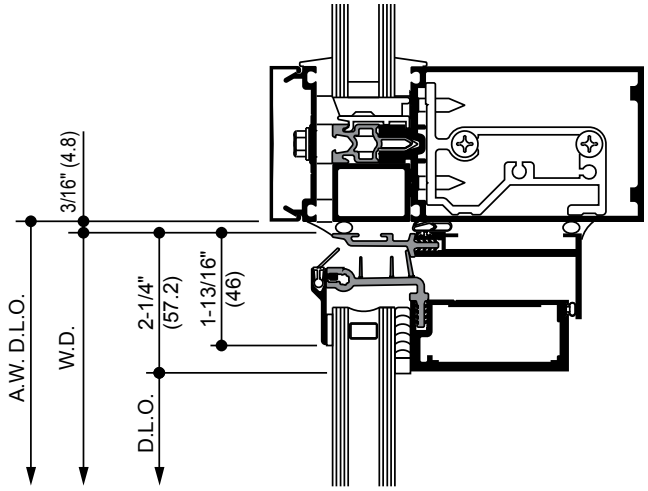

2 Sill

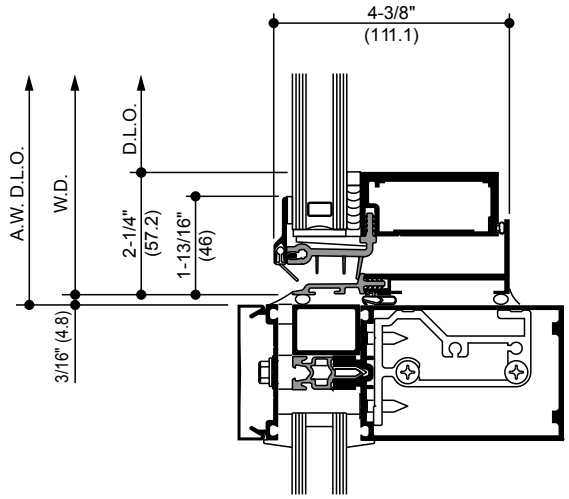

3 Jamb

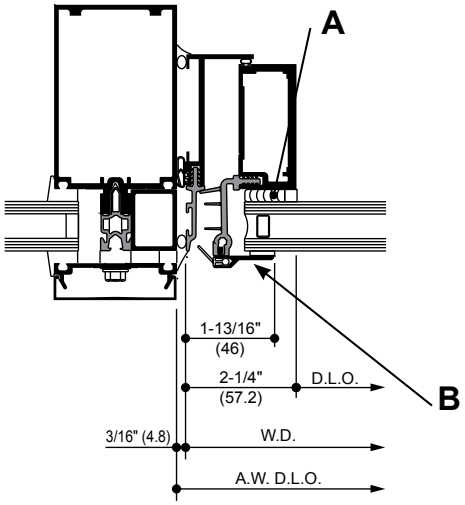

A. Structural Silicone Sealant (by Others)*
B. Trim Cap available in #29 Black anodized finish only.

NOTICE
* Installer is responsible for all required compatibility review and approvals with the Structural Silicone Manufacturer and the Insulating Glass Unit Manufacturer.

NOTE
The Kawneer GLASSvent® UT Window is shown with 1600UT Framing System®1 Curtain Wall for reference. Other Kawneer systems can be used. For product specific applications, consult your Kawneer representative.

Laws and building and safety codes governing the design and use of Kawneer products vary widely. Kawneer does not control the selection of its products and assumes no responsibility therefor. See full disclaimer at end of document.
© 2020, Kawneer Company, Inc.

Project-Out Window - 1-3/4" Infill

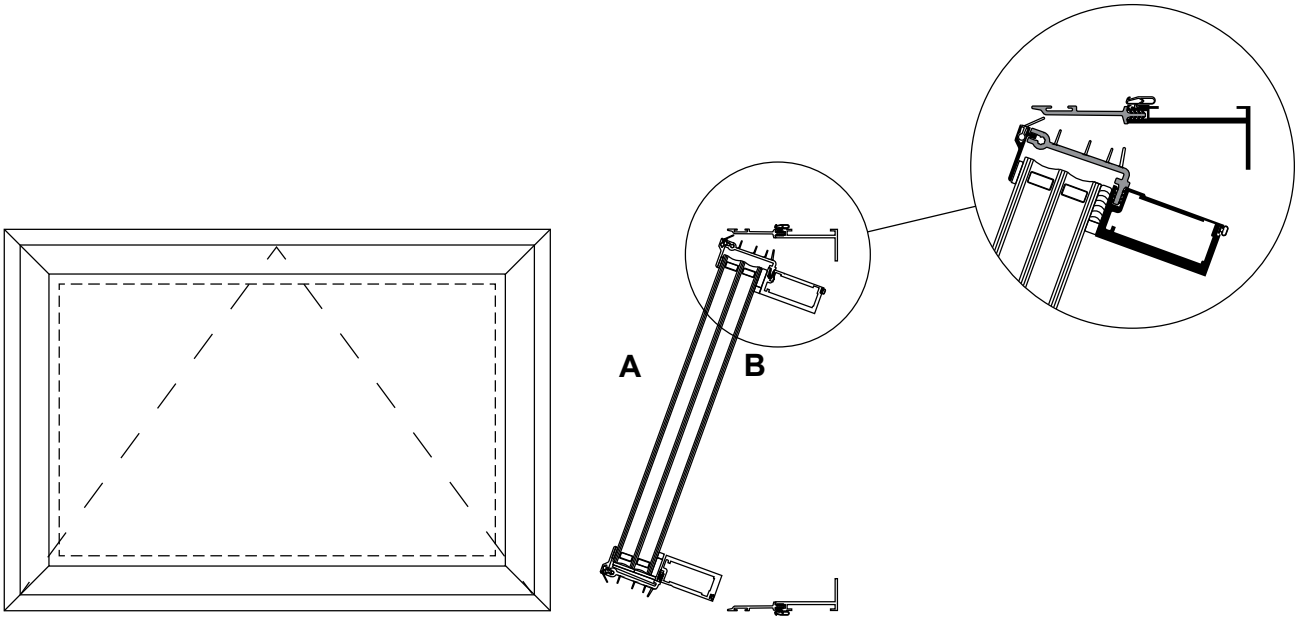

A. Exterior
B. Interior

CLASS and GRADE	CLASS CW-PG70-AP / AW-PG90-AP
TESTING STANDARD	AAMA / WDMA / CSA / 101 / I.S.2 / A440 (NAFS)
SYSTEM DEPTH	CW (Shallow) - 3-7/8" / AW (Deep) - 5-1/8" Overall System Depth
TYPICAL WALL THICKNESS	CW (Shallow) - .125 Nominal Frame / .100" Nominal Vent AW (Deep) -. 125 Nominal Frame / .156" Nominal Vent
TYPICAL MAX. VENT SIZE	CW (Shallow) - 48" x 32" / AW (Deep) - 60" x 36"
TYPICAL MIN. VENT SIZE	17" x 17"
INFILL OPTIONS	1-3/4"
STANDARD HARDWARE	Stainless Steel 4-Bar Hinges Cast White Bronze Cam Handles
OPTIONAL HARDWARE	Access Control Locks Hook Bolt Lock Handle Pivot Shoe Roto-Operator (Size Limitations - Minimum 26" Wide x 17" High, Maximum 60" Wide x 36" High) (Verify with application engineering project specific limit stop requirements based on window size) Limit Stop (Verify with application engineering project specific limit stop requirements based on window size) Pole and Pole Ring
OTHER OPTIONS	Insect Screens

Laws and building and safety codes governing the design and use of Kawneer products vary widely. Kawneer does not control the selection of its products and assumes no responsibility therefor. See full disclaimer at end of document.
© 2020, Kawneer Company, Inc.
May, 2026
97911-351
ADME077EN

CW (Shallow) - Project-Out Window - 1-3/4" Infill

Typical Elevation

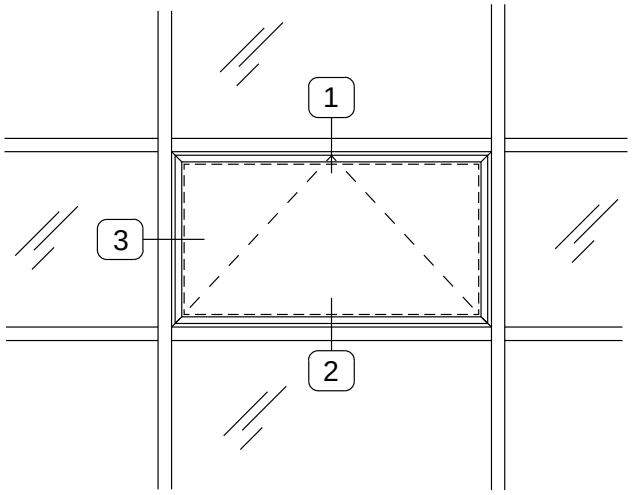

1 Head

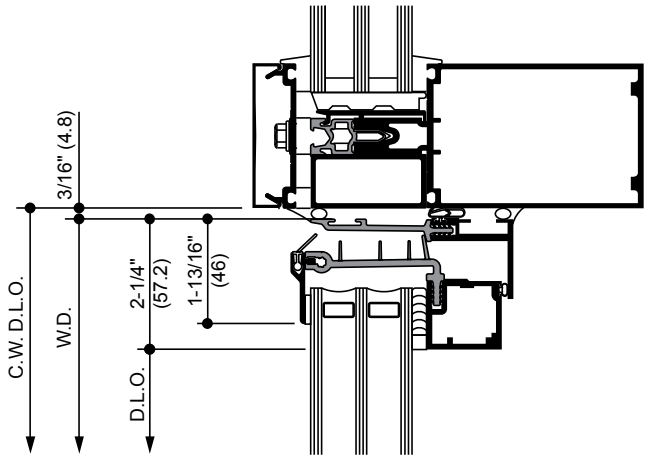

2 Sill

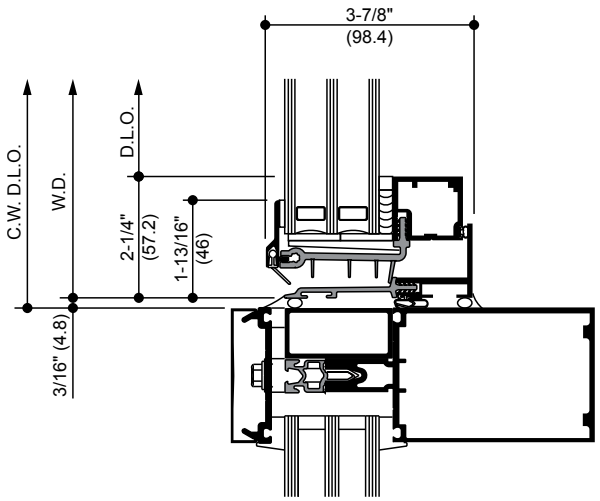

3 Jamb

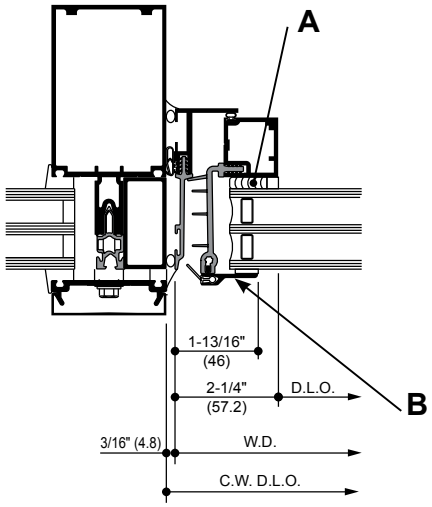

A. Structural Silicone Sealant (by Others)*
B. Trim Cap available in #29 Black anodized finish only.

NOTICE
* Installer is responsible for all required compatibility review and approvals with the Structural Silicone Manufacturer and the Insulating Glass Unit Manufacturer.

NOTE
The Kawneer GLASSvent® UT Window is shown with 1600UT Framing System®1 Curtain Wall for reference. Other Kawneer systems can be used. For product specific applications, consult your Kawneer representative.

Laws and building and safety codes governing the design and use of Kawneer products vary widely. Kawneer does not control the selection of its products and assumes no responsibility therefor. See full disclaimer at end of document.
© 2020, Kawneer Company, Inc.

AW (Deep) - Project-Out Window - 1-3/4" Infill

Typical Elevation

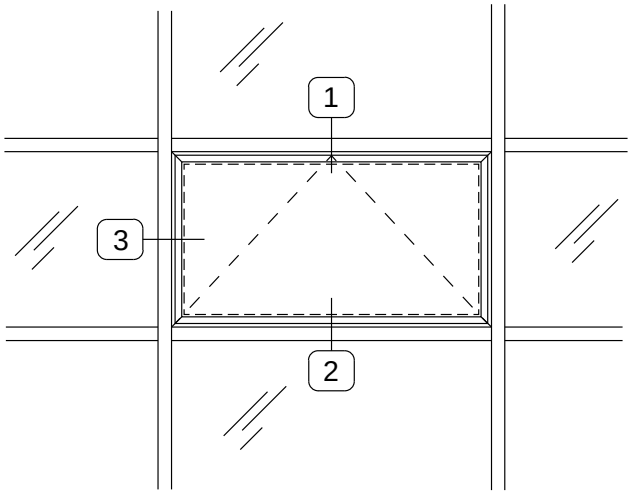

1 Head

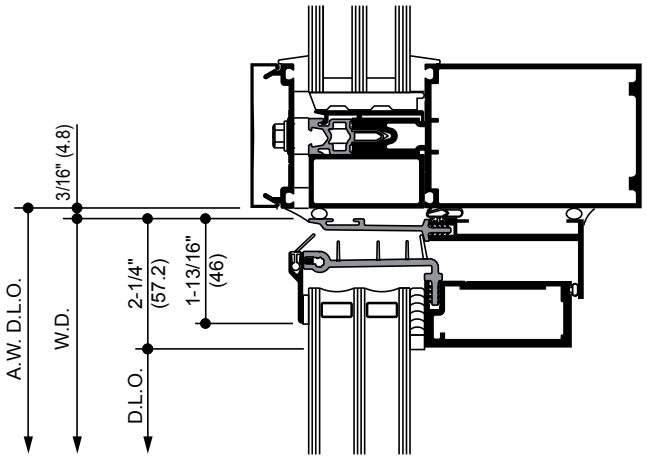

2 Sill

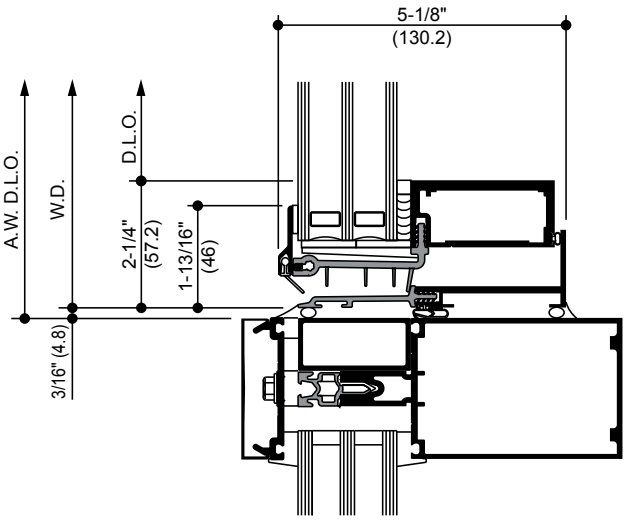

3 Jamb

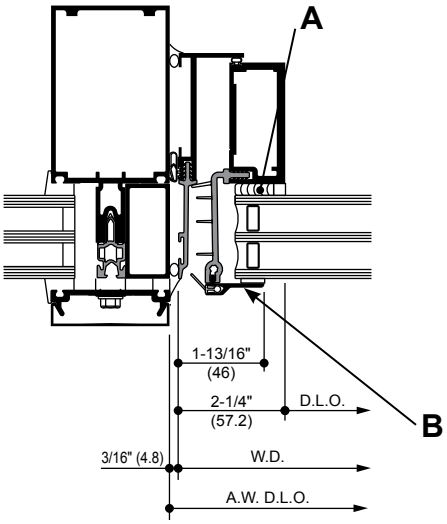

A. Structural Silicone Sealant (by Others)*
B. Trim Cap available in #29 Black anodized finish only.

NOTICE
* Installer is responsible for all required compatibility review and approvals with the Structural Silicone Manufacturer and the Insulating Glass Unit Manufacturer.

NOTE
The Kawneer GLASSvent® UT Window is shown with 1600UT Framing System®1 Curtain Wall for reference. Other Kawneer systems can be used. For product specific applications, consult your Kawneer representative.

KAWNEER

Laws and building and safety codes governing the design and use of Kawneer products vary widely. Kawneer does not control the selection of its products and assumes no responsibility therefor. See full disclaimer at end of document.
© 2020, Kawneer Company, Inc.

Accessories - Project-Out Window

STAINLESS STEEL 4 BAR HINGES	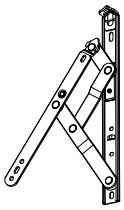	A standard hinge for ventilators providing approximately 45° to 60° openings depending on size. An optional limit stop is available to restrict hinge travel and limit vent opening.
CAM HANDLE	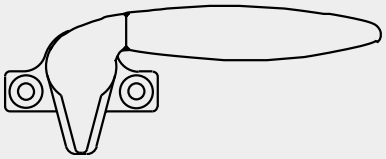	Cast white bronze cam handles are standard for the manual operation and locking of ventilators.
CAM HANDLE WITH POLE RING	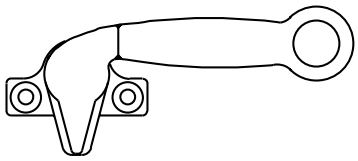	Cast white bronze cam handles with pole ring provide manual operation of ventilators located above reach. These handles are operated with a sash pole.
POLE RING		Cast white bronze pole ring is used in conjunction with locking hardware for sash pole operation of ventilators.
SASH POLE AND HANGER	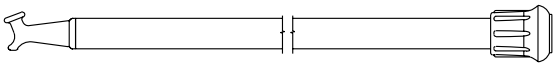 	A 3/4" diameter aluminum sash pole with a cast white bronze pull down hook and black rubber tip. Available in 6 ft. and 12 ft. lengths with optional cast white bronze Pole Hanger.
ACCESS CONTROL LOCK		In lieu of cam handles cast white bronze access control locks are offered for managed control of vent operations. Lock is operated with a manganese bronze removable handle.
PIVOT-SHOE ROTO-OPERATOR	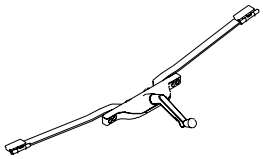	Optional pivot shoe roto operator is located on the center line of the bottom horizontal frame. Standard finish shall be gray. Optional black and white finishes.
HOOK BOLT LOCK	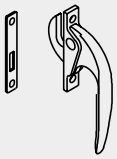	For use with pivot-shoe roto operator in lieu of cam handles. Standard finish shall be US-25-D clear white bronze. Optional black and white finishes.

Laws and building and safety codes governing the design and use of Kawneer products vary widely. Kawneer does not control the selection of its products and assumes no responsibility therefor. See full disclaimer at end of document.
© 2020, Kawneer Company, Inc.

Outswing Casement Window

Outswing Casement Window - 1" Infill

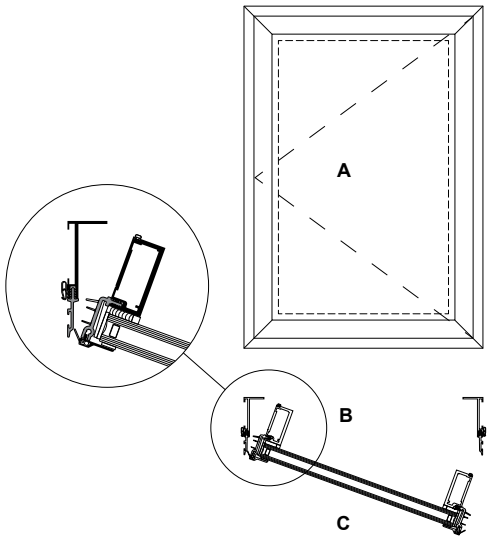

A. Hinged Left
B. Interior
C. Exterior

CLASS and GRADE	CLASS CW-PG70-C / AW-PG50-C / AW-PG90-C
TESTING STANDARD	AAMA / WDMA / CSA / 101 / I.S.2 / A440 (NAFS)
SYSTEM DEPTH	CW (Shallow) - 3-1/8" / AW (Deep) - 4-3/8" Overall System Depth
TYPICAL WALL THICKNESS	CW (Shallow) - .125 Nominal Frame / .100" Nominal Vent AW (Deep) -. 125 Nominal Frame / .156" Nominal Vent
TYPICAL MAX. VENT SIZE	CW (Shallow) - 32" x 48" / AW (Deep) - 36" x 72"
TYPICAL MIN. VENT SIZE	17" x 24"
INFILL OPTIONS	1"
STANDARD HARDWARE	Stainless Steel 4-Bar Hinges Cast White Bronze Cam Handles
OPTIONAL HARDWARE	Access Control Locks Hook Bolt Lock or Multi-Point Lock Roto Operator (Size Limitations - Minimum 25" Wide x 24" High, Maximum 36" Wide x 60" High) (Verify with application engineering project specific limit stop requirements based on window size) Limit Stop (Verify with application engineering project specific limit stop requirements based on window size) Pole and Pole Ring
OTHER OPTIONS	Insect Screens

Laws and building and safety codes governing the design and use of Kawneer products vary widely. Kawneer does not control the selection of its products and assumes no responsibility therefor. See full disclaimer at end of document.
© 2020, Kawneer Company, Inc.
May, 2026
97911-351
ADME077EN

CW (Shallow) - Outswing Casement Window - 1" Infill

Typical Elevation

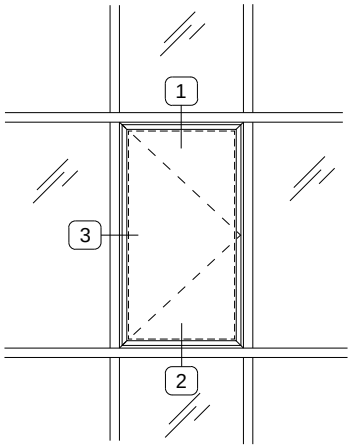

1 Head

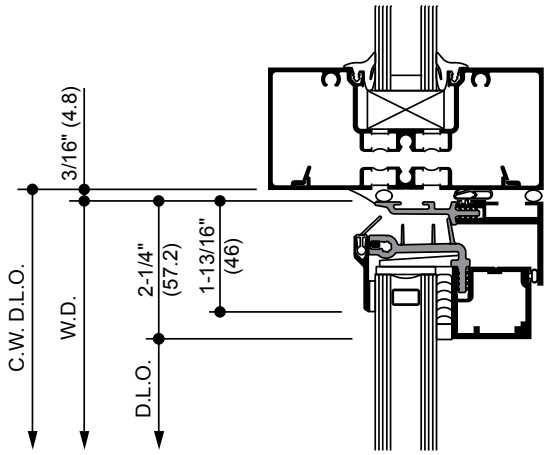

2 Sill

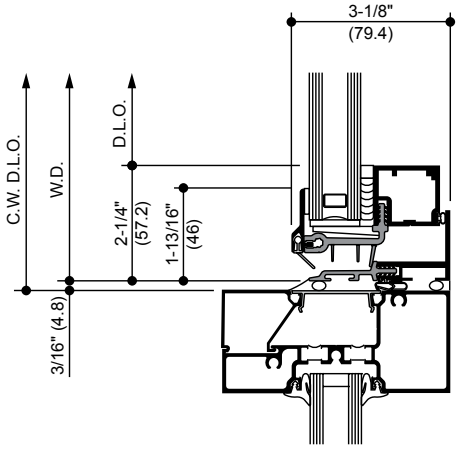

3 Jamb

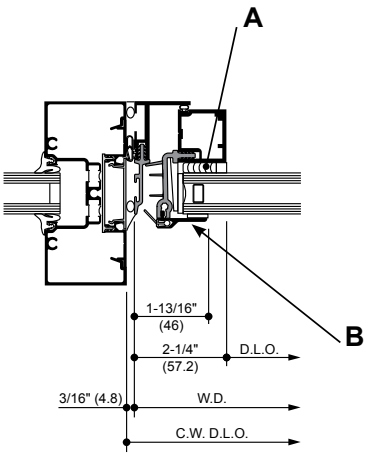

A. Structural Silicone Sealant (by Others)*
B. Trim Cap available in #29 Black anodized finish only.

NOTICE
* Installer is responsible for all required compatibility review and approvals with the Structural Silicone Manufacturer and the Insulating Glass Unit Manufacturer.

NOTE
The Kawneer GLASSvent® UT Window is shown with Trifab® 451UT Framing System for reference. Other Kawneer systems can be used. For product specific applications, consult your Kawneer representative.

Laws and building and safety codes governing the design and use of Kawneer products vary widely. Kawneer does not control the selection of its products and assumes no responsibility therefor. See full disclaimer at end of document.
© 2020, Kawneer Company, Inc.

AW (Deep) - Outswing Casement Window - 1" Infill

Typical Elevation

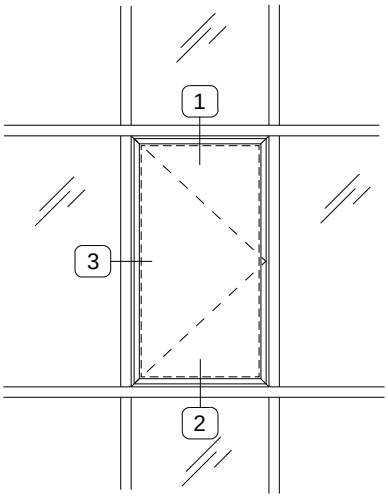

1 Head

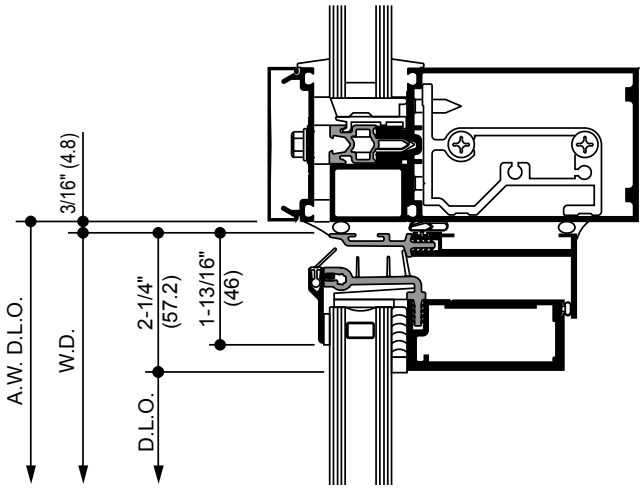

2 Sill

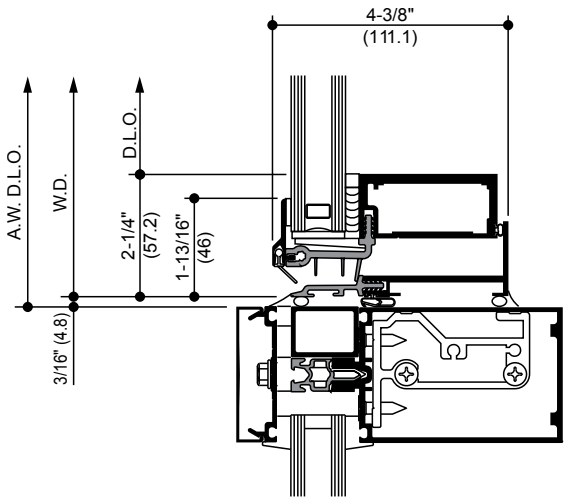

3 Jamb

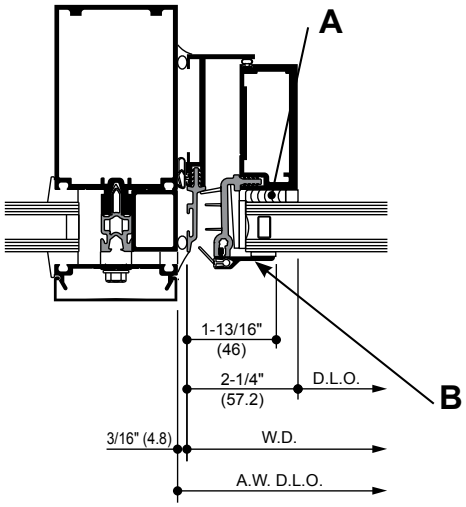

A. Structural Silicone Sealant (by Others)*
B. Trim Cap available in #29 Black anodized finish only.

NOTICE
* Installer is responsible for all required compatibility review and approvals with the Structural Silicone Manufacturer and the Insulating Glass Unit Manufacturer.

NOTE
The Kawneer GLASSvent® UT Window is shown with 1600UT Framing System®1 Curtain Wall for reference. Other Kawneer systems can be used. For product specific applications, consult your Kawneer representative.

Laws and building and safety codes governing the design and use of Kawneer products vary widely. Kawneer does not control the selection of its products and assumes no responsibility therefor. See full disclaimer at end of document.
© 2020, Kawneer Company, Inc.

Outswing Casement Window - 1-3/4" Infill

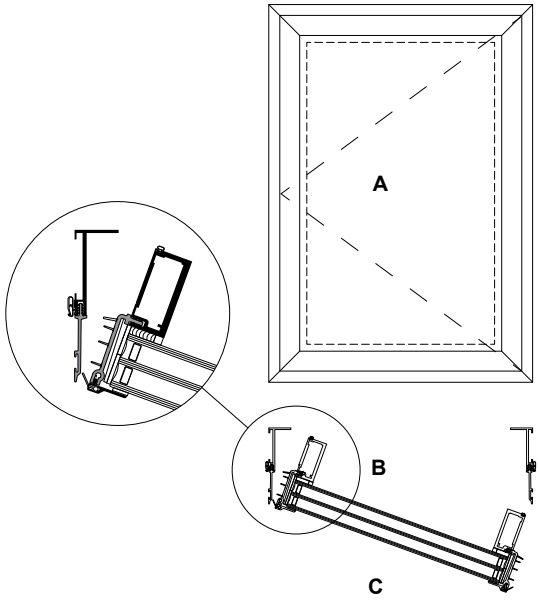

A. Hinged Left
B. Interior
C. Exterior

CLASS and GRADE	CLASS CW-PG70-C / AW-PG90-C
TESTING STANDARD	AAMA / WDMA / CSA / 101 / I.S.2 / A440 (NAFS)
SYSTEM DEPTH	CW (Shallow) - 3-7/8" / AW (Deep) - 5-1/8" Overall System Depth
TYPICAL WALL THICKNESS	CW (Shallow) - .125 Nominal Frame / .100" Nominal Vent AW (Deep) -. 125 Nominal Frame / .156" Nominal Vent
TYPICAL MAX. VENT SIZE	CW (Shallow) - 32" x 48" / AW (Deep) - 36" x 60"
TYPICAL MIN. VENT SIZE	17" x 24"
INFILL OPTIONS	1-3/4"
STANDARD HARDWARE	Stainless Steel 4-Bar Hinges Cast White Bronze Cam Handles
OPTIONAL HARDWARE	Access Control Locks Hook Bolt Lock or Multi-Point Lock Limit Stop (Verify with application engineering project specific limit stop requirements based on window size) Pole and Pole Ring Roto Operator (Size Limitations - Minimum 25" Wide x 24" High, Maximum 36" Wide x 60" High) (Verify with application engineering project specific limit stop requirements based on window size)
OTHER OPTIONS	Insect Screens

Laws and building and safety codes governing the design and use of Kawneer products vary widely. Kawneer does not control the selection of its products and assumes no responsibility therefor. See full disclaimer at end of document.
© 2020, Kawneer Company, Inc.

CW (Shallow) - Outswing Casement Window - 1-3/4" Infill

Typical Elevation

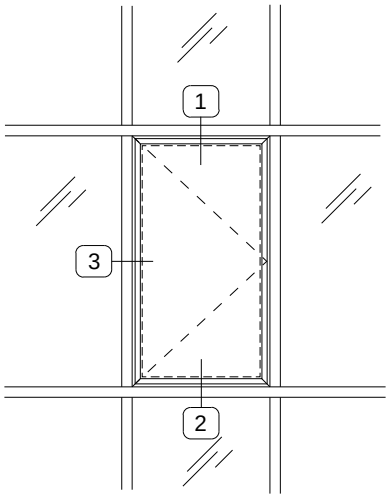

1 Head

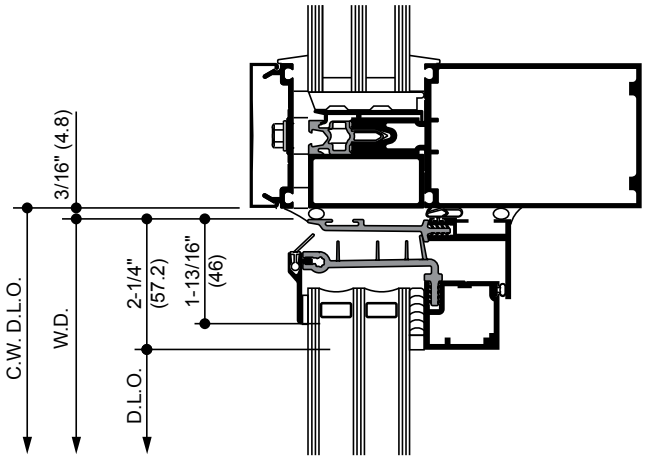

2 Sill

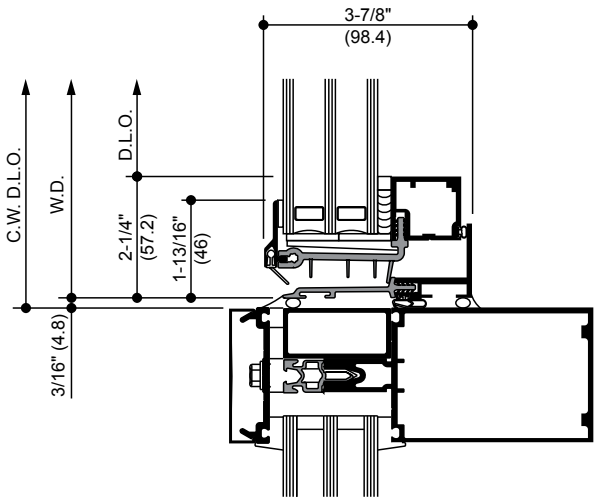

3 Jamb

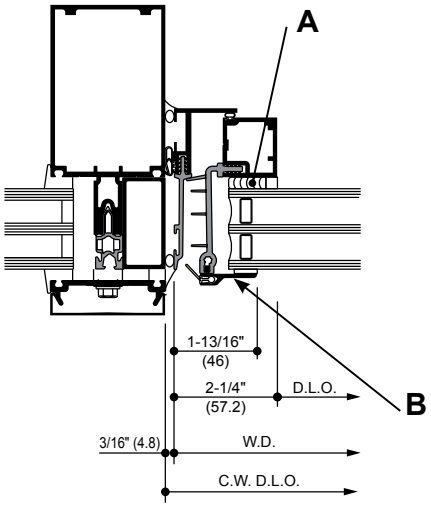

A. Structural Silicone Sealant (by Others)*
B. Trim Cap available in #29 Black anodized finish only.

NOTICE
* Installer is responsible for all required compatibility review and approvals with the Structural Silicone Manufacturer and the Insulating Glass Unit Manufacturer.

NOTE
The Kawneer GLASSvent® UT Window is shown with 1600UT Framing System®1 Curtain Wall for reference. Other Kawneer systems can be used. For product specific applications, consult your Kawneer representative.

Laws and building and safety codes governing the design and use of Kawneer products vary widely. Kawneer does not control the selection of its products and assumes no responsibility therefor. See full disclaimer at end of document.
© 2020, Kawneer Company, Inc.
May, 2026
97911-351
ADME077EN

AW (Deep) - Outswing Casement Window - 1-3/4" Infill

Typical Elevation

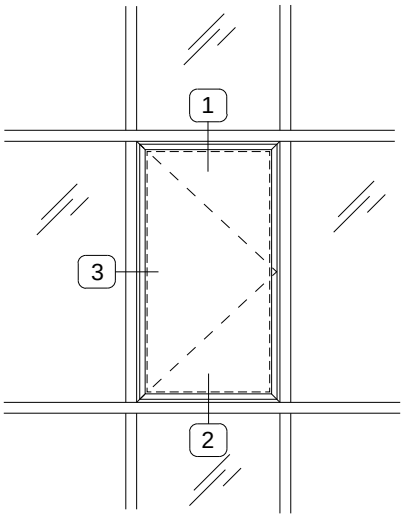

1 Head

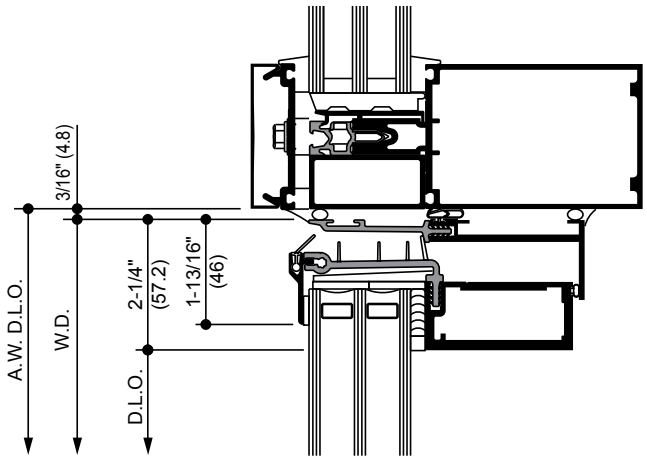

2 Sill

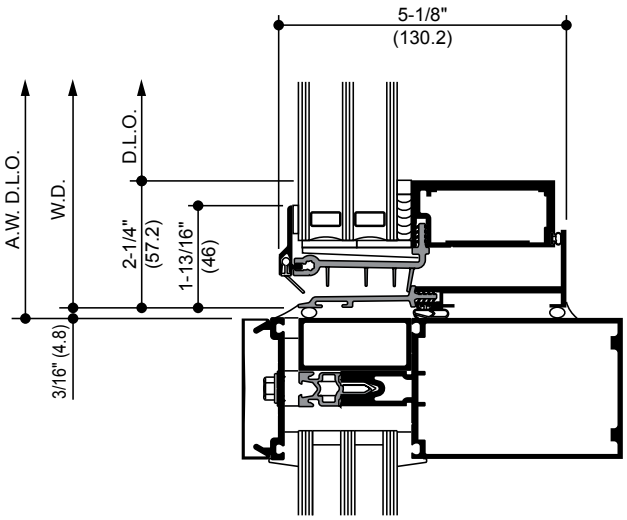

3 Jamb

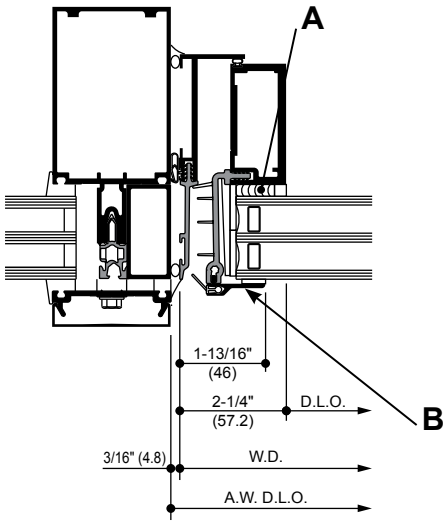

A. Structural Silicone Sealant (by Others)*
B. Trim Cap available in #29 Black anodized finish only.

NOTICE
* Installer is responsible for all required compatibility review and approvals with the Structural Silicone Manufacturer and the Insulating Glass Unit Manufacturer.

NOTE
The Kawneer GLASSvent® UT Window is shown with 1600UT Framing System®1 Curtain Wall for reference. Other Kawneer systems can be used. For product specific applications, consult your Kawneer representative.

Laws and building and safety codes governing the design and use of Kawneer products vary widely. Kawneer does not control the selection of its products and assumes no responsibility therefor. See full disclaimer at end of document.
© 2020, Kawneer Company, Inc.

Accessories - Outswing Casement Window

STAINLESS STEEL 4 BAR HINGES	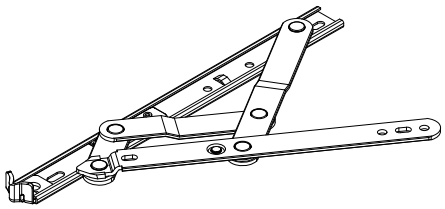	A standard hinge for ventilators providing an opening of up to 45°. An optional limit stop is available to restrict hinge travel and limit vent opening.
CAM HANDLE	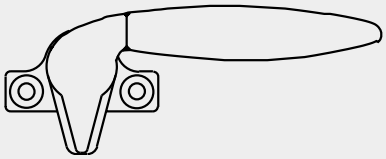	Cast white bronze cam handles are standard for the manual operation and locking of ventilators.
CAM HANDLE WITH POLE RING	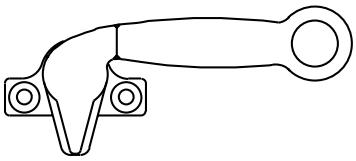	Cast white bronze cam handles with pole ring provide manual operation of ventilators located above reach. These handles are operated with a sash pole.
POLE RING		Cast white bronze pole ring is used in conjunction with locking hardware for sash pole operation of ventilators.
SASH POLE AND HANGER	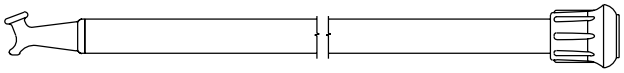 	A 3/4" diameter aluminum sash pole with a cast white bronze pull down hook and black rubber tip. Available in 6 ft. and 12 ft. lengths with optional cast white bronze Pole Hanger.
ACCESS CONTROL LOCK		In lieu of cam handles cast white bronze access control locks are offered for managed control of vent operations. Lock is operated with a manganese bronze removable handle.
ROTO-OPERATOR	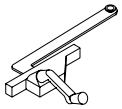	Roto operators are used with butt hinges only and located at the bottom horizontal frame. Standard finish shall be brushed copper nickel to match US- 25-D. Optional black and white finishes.
HOOK BOLT LOCK	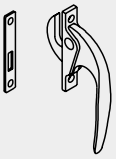	Optional hook bolt lock in lieu of cam handle. Standard finish shall be US-25-D clear white bronze. Optional black and white finishes.
MULTI-POINT LOCK		Optional single locking handle for concealed multipoint locks located on the vertical frame. Standard finish shall be US-25-D clear white bronze. Optional black and white finishes.

Laws and building and safety codes governing the design and use of Kawneer products vary widely. Kawneer does not control the selection of its products and assumes no responsibility therefor. See full disclaimer at end of document.
© 2020, Kawneer Company, Inc.

May, 2026
97911-351
ADME077EN

Thermal Performance

Example of Generic Project-Specific U-Factor Calculation

NOTE
The percent of glass will vary on specific products, depending on sightlines.

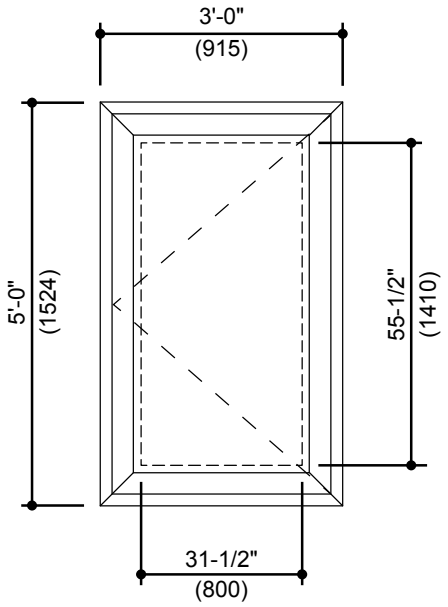

Example Glass U-factor	= 0.28 Btu/(ft^2 • h • °F)
Total Daylight Opening	= 31-1/2" • 55-1/2" = 12.14 ft^2
Total Projected Area	= 3'0" • 5' 0" = 15 ft^2
Percentage of Glass	= (Total Daylight Opening ÷ Total Projected Area) • 100
	= (12.14 ÷ 15) • 100 = 81%

Laws and building and safety codes governing the design and use of Kawneer products vary widely. Kawneer does not control the selection of its products and assumes no responsibility therefor. See full disclaimer at end of document.
© 2020, Kawneer Company, Inc.

Glass Area Chart

Based on 81% glass and center-of-glass U-factor of 0.28, the system U-factor is equal to 0.38 Btu/(h•ft^2•°F).

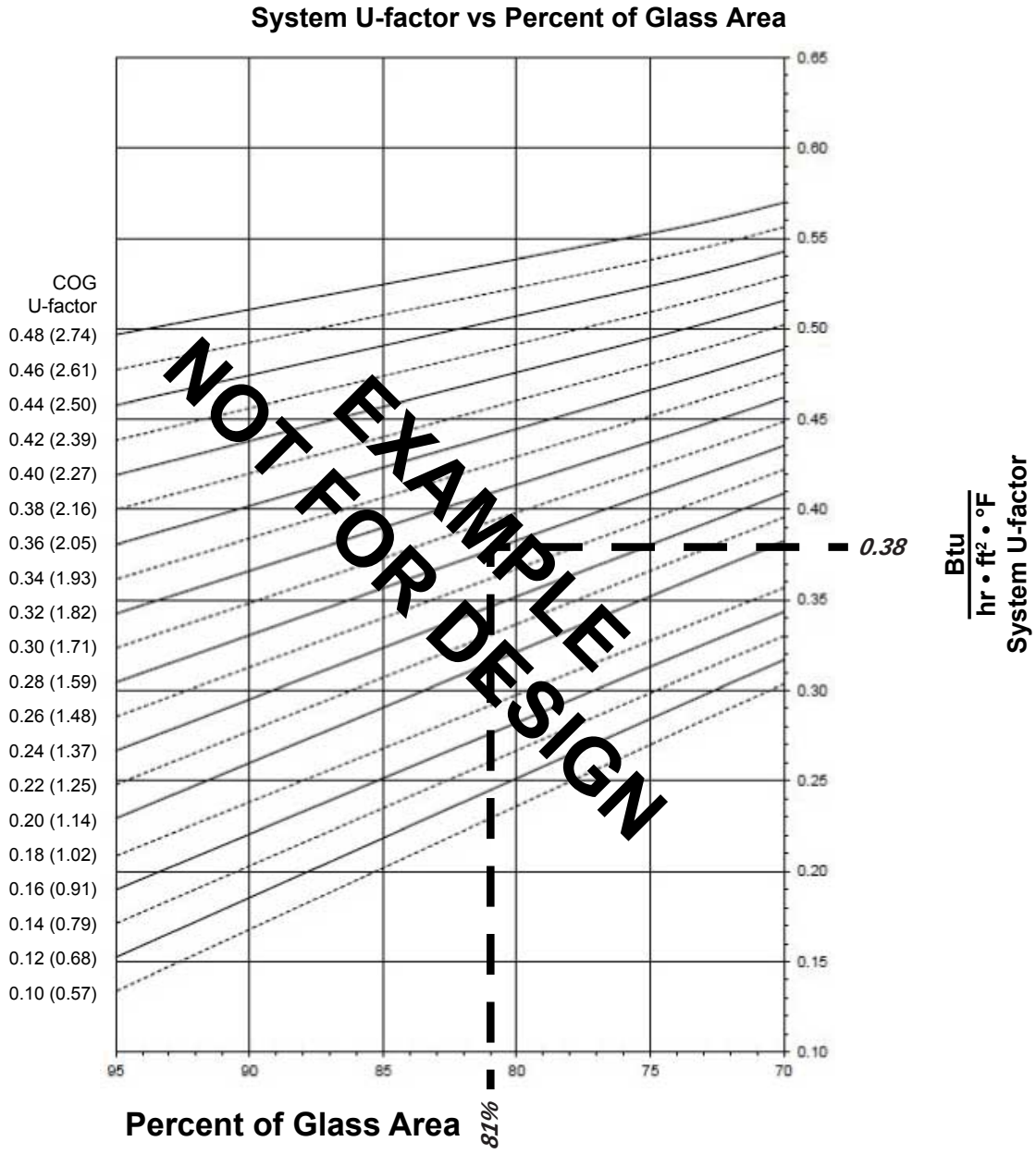

Laws and building and safety codes governing the design and use of Kawneer products vary widely. Kawneer does not control the selection of its products and assumes no responsibility therefor. See full disclaimer at end of document.
© 2020, Kawneer Company, Inc.

May, 2026
97911-351
ADME077EN

AW (Deep) - Project-Out Window with 1" Glazing (Warm-Edge Glazing Spacer)

NOTE

These notes apply to the charts for system U-factor, solar heat gain coefficient (SHGC), and visible transmittance (VT):

- Values in parentheses are metric.
- COG = Center of Glass
- Charts are generated per AAMA 507.
- For glass values that are not listed, linear interpolation is permitted.
- Glass properties are based on center-of-glass values and are obtained from your glass supplier.

System U-factor for Glass Area

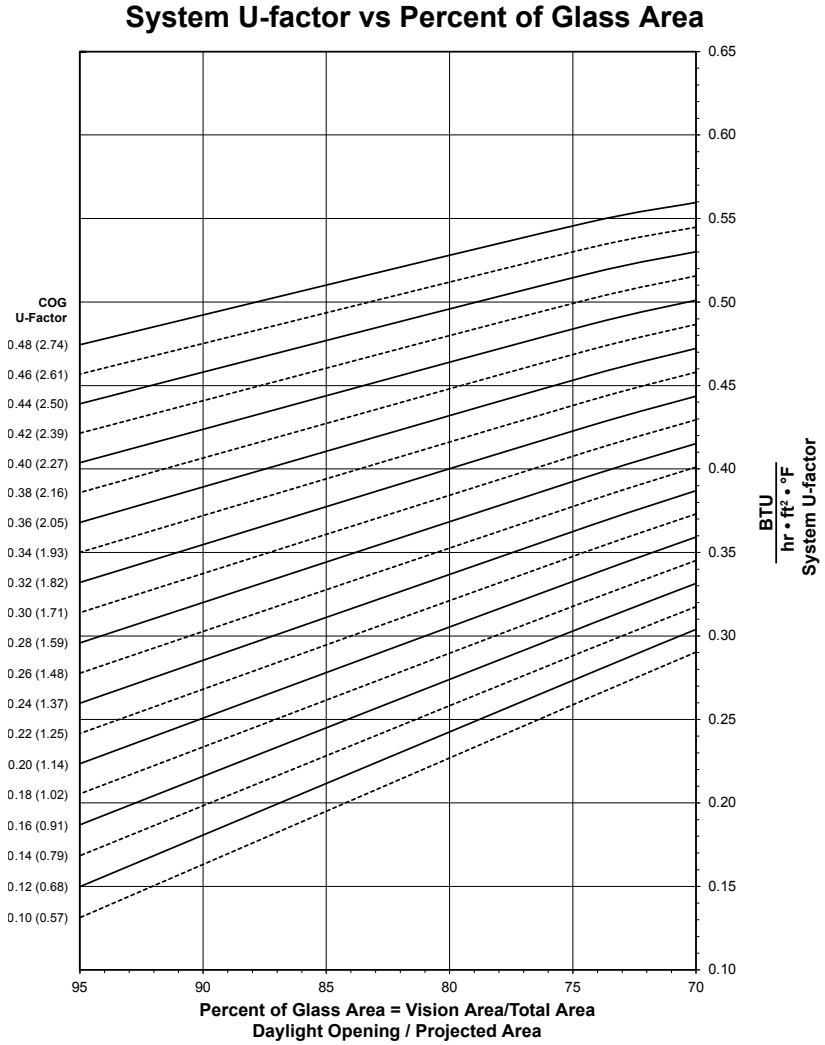

See Note, page 25.

Laws and building and safety codes governing the design and use of Kawneer products vary widely. Kawneer does not control the selection of its products and assumes no responsibility therefor. See full disclaimer at end of document.
© 2020, Kawneer Company, Inc.

AW (Deep) - Project-Out Window with 1" Glazing

Thermal Transmittance (BTU/hr • ft^2 • °F)

Glass U-factor [a. b. c.]	Overall U-factor [d.]
0.48	0.55
0.46	0.53
0.44	0.52
0.42	0.50
0.40	0.49
0.38	0.47
0.36	0.46
0.34	0.44
0.32	0.43
0.30	0.41
0.28	0.40
0.26	0.38
0.24	0.37
0.22	0.35
0.20	0.34

[a.] U-factor values are determined in accordance with NFRC 100.

[b.] For glass values that are not listed, linear interpolation is permitted.

[c.] Glass properties are based on center-of-glass values and are obtained from your glass supplier.

[d.] Overall U-factor values are based on the standard NFRC specimen size of 1,500 mm wide by 600 mm high (59-1/6" by 23-5/8").

Laws and building and safety codes governing the design and use of Kawneer products vary widely. Kawneer does not control the selection of its products and assumes no responsibility therefor. See full disclaimer at end of document.
© 2020, Kawneer Company, Inc.

System Solar Heat Gain Coefficient (SHGC) - AW (Deep) - Project-Out Window with 1" Glazing

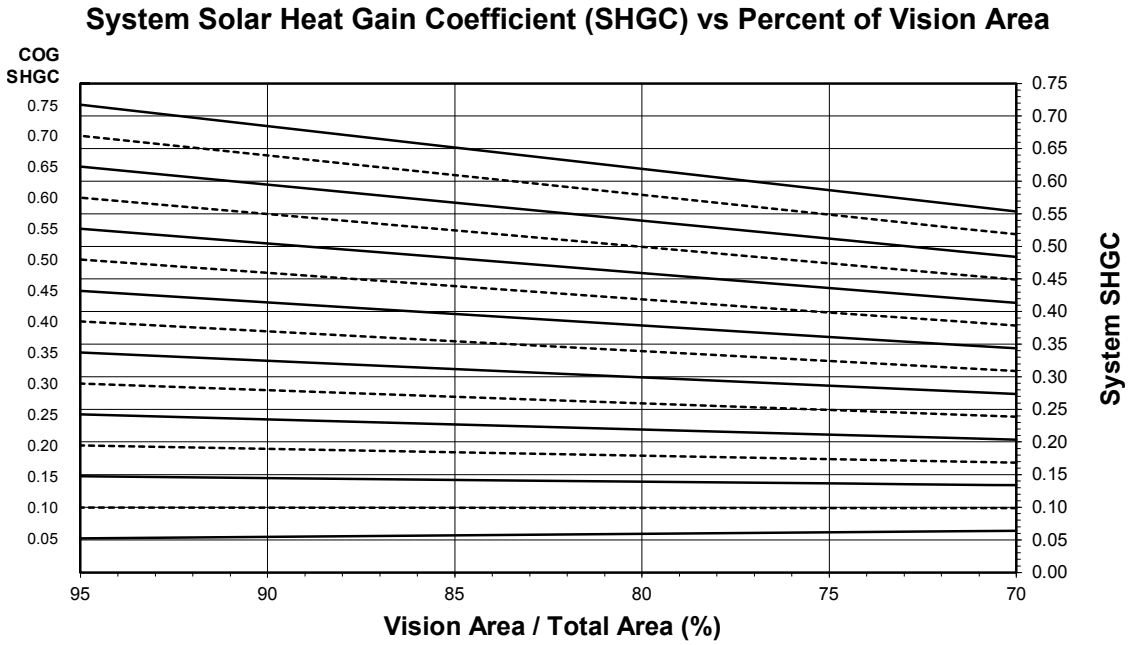

See Note, page 25.

Solar Heat Gain Coefficient (SHGC) Matrix

Glass SHGC [a.] [b.] [c.]	Overall SHGC [d.]
0.75	0.58
0.70	0.55
0.65	0.51
0.60	0.47
0.55	0.43
0.50	0.40
0.45	0.36
0.40	0.32
0.35	0.28
0.30	0.25
0.25	0.21
0.20	0.17
0.15	0.14
0.10	0.10
0.05	0.06

[a.] SHGC values are determined in accordance with NFRC 200.

[b.] For glass values that are not listed, linear interpolation is permitted.

[c.] Glass properties are based on center-of-glass values and are obtained from your glass supplier.

[d.] Overall SHGC values are based on the standard NFRC specimen size of 1,500 mm wide by 600 mm high (59-1/6" by 23-5/8").

Laws and building and safety codes governing the design and use of Kawneer products vary widely. Kawneer does not control the selection of its products and assumes no responsibility therefor. See full disclaimer at end of document.
© 2020, Kawneer Company, Inc.

System Visible Transmittance (VT) - AW (Deep) - Project-Out Window with 1" Glazing

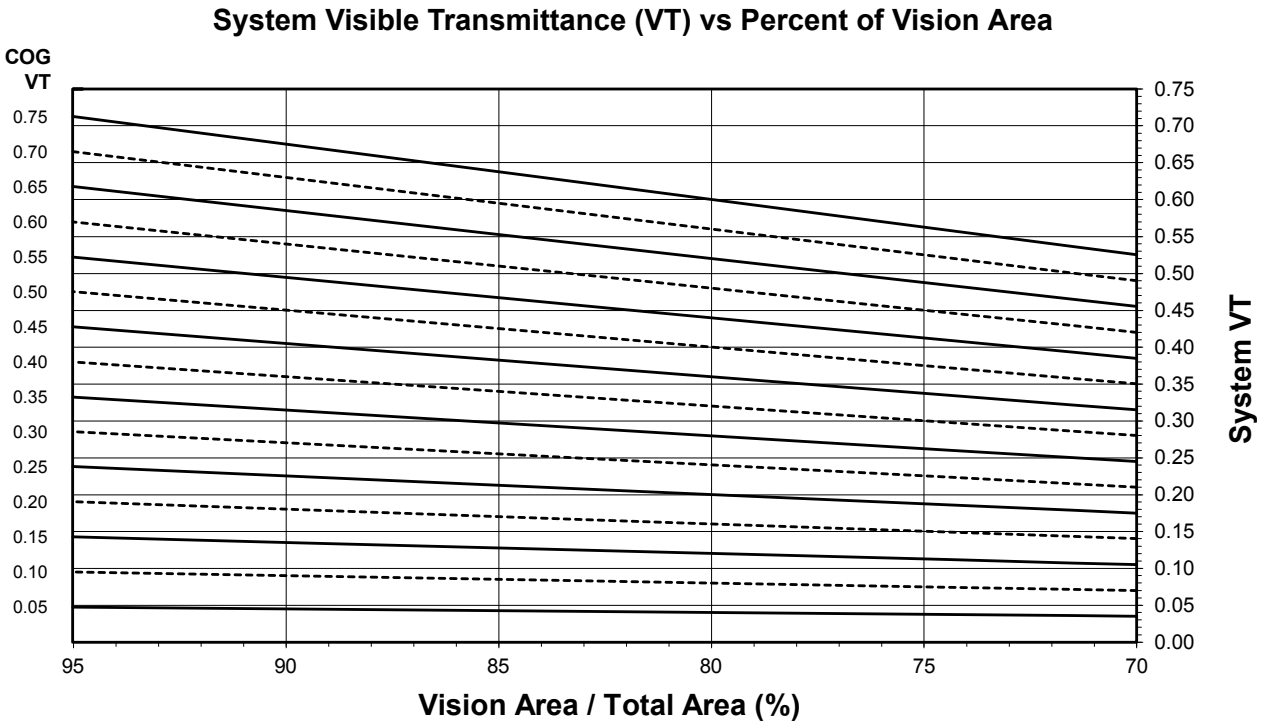

See Note, page 25.

Visible Transmittance (VT)

Glass VT [a. b. c.]	Overall VT [d.]
0.75	0.56
0.70	0.52
0.65	0.48
0.60	0.45
0.55	0.41
0.50	0.37
0.45	0.33
0.40	0.30
0.35	0.26
0.30	0.22
0.25	0.19
0.20	0.15
0.15	0.11
0.10	0.07
0.05	0.04

[a.] VT values are determined in accordance with NFRC 200.

[b.] For glass values that are not listed, linear interpolation is permitted.

[c.] Glass properties are based on center-of-glass values and are obtained from your glass supplier.

[d.] Overall VT values are based on the standard NFRC specimen size of 1,500 mm wide by 600 mm high (59-1/6" by 23-5/8").

Laws and building and safety codes governing the design and use of Kawneer products vary widely. Kawneer does not control the selection of its products and assumes no responsibility therefor. See full disclaimer at end of document.
© 2020, Kawneer Company, Inc.

AW (Deep) - Project-Out Window with 1-3/4" Glazing (Warm-Edge Glazing Spacer)

NOTE

These notes apply to the charts for system U-factor, solar heat gain coefficient (SHGC), and visible transmittance (VT):

- Values in parentheses are metric.
- COG = Center of Glass
- Charts are generated per AAMA 507.
- For glass values that are not listed, linear interpolation is permitted.
- Glass properties are based on center-of-glass values and are obtained from your glass supplier.

System U-factor for Glass Area

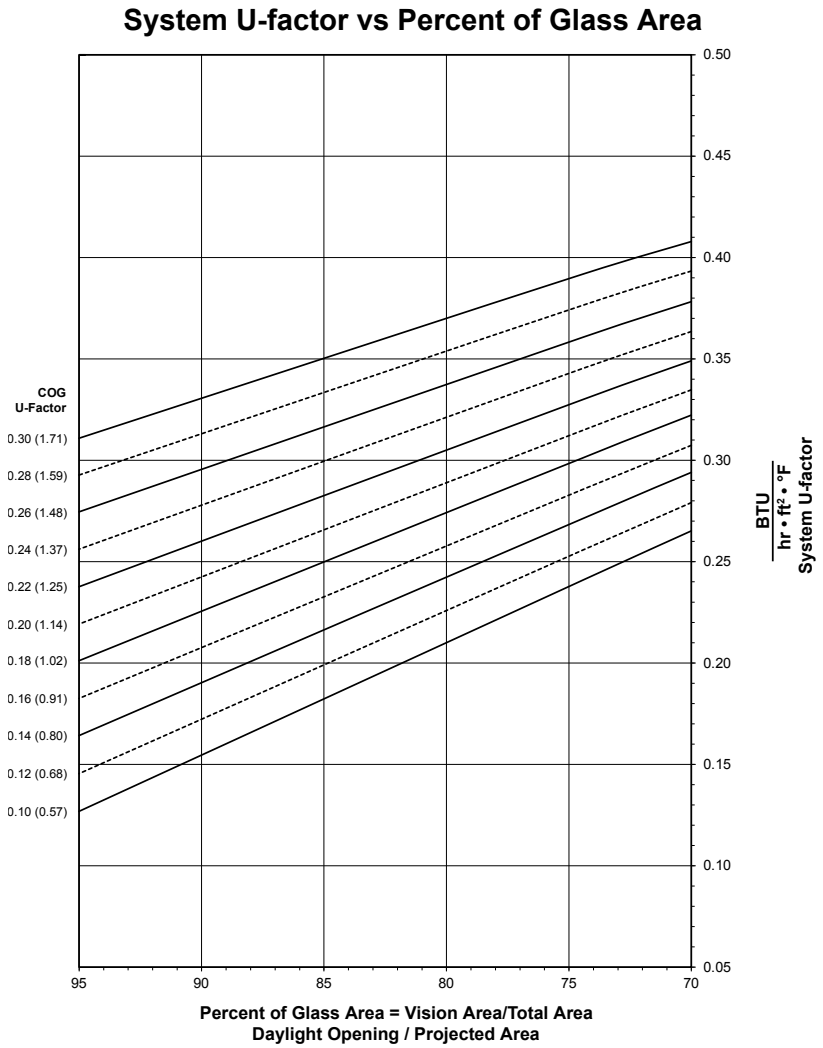

See Note, page 29.

Laws and building and safety codes governing the design and use of Kawneer products vary widely. Kawneer does not control the selection of its products and assumes no responsibility therefor. See full disclaimer at end of document.
© 2020, Kawneer Company, Inc.

AW (Deep) - Project-Out Window with 1-3/4" Glazing

Thermal Transmittance (BTU/hr • ft^2 • °F)

Glass U-factor [a. b. c.]	Overall U-factor [d.]
0.30	0.39
0.28	0.38
0.26	0.36
0.24	0.35
0.22	0.33
0.20	0.31
0.18	0.30
0.16	0.29
0.14	0.27
0.12	0.26
0.10	0.24

[a.] U-factor values are determined in accordance with NFRC 100.

[b.] For glass values that are not listed, linear interpolation is permitted.

[c.] Glass properties are based on center-of-glass values and are obtained from your glass supplier.

[d.] Overall U-factor values are based on the standard NFRC specimen size of 1,500 mm wide by 600 mm high (59-1/6" by 23-5/8").

Laws and building and safety codes governing the design and use of Kawneer products vary widely. Kawneer does not control the selection of its products and assumes no responsibility therefor. See full disclaimer at end of document.
© 2020, Kawneer Company, Inc.

May, 2026
97911-351
ADME077EN

System Solar Heat Gain Coefficient (SHGC) - AW (Deep) - Project-Out Window with 1-3/4" Glazing

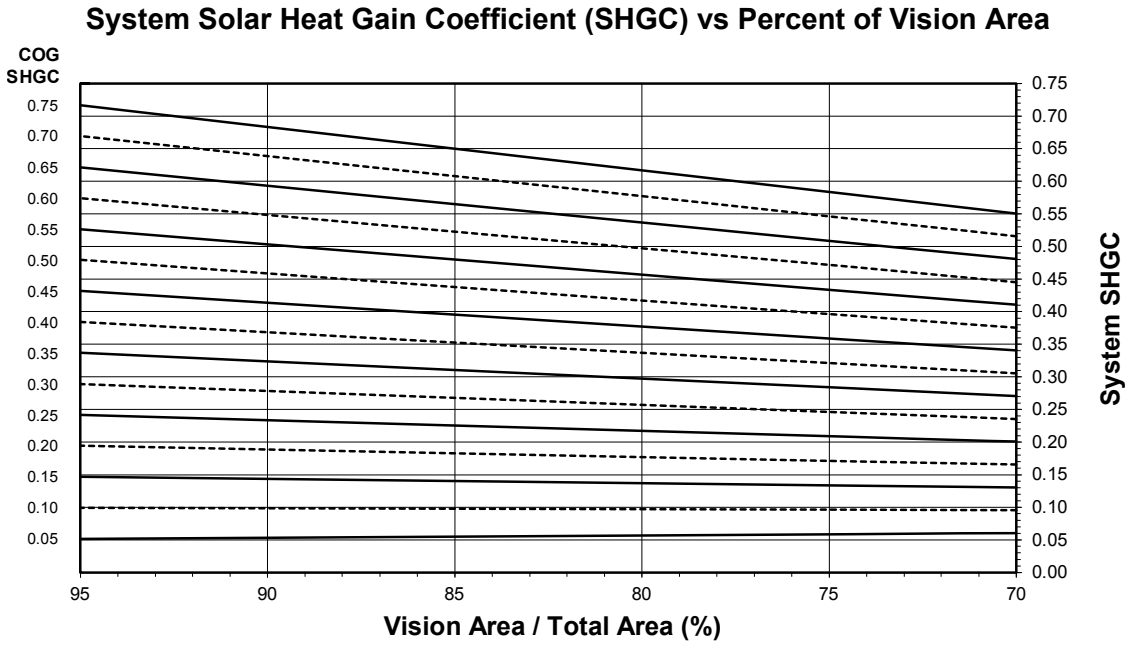

See Note, page 29.

Solar Heat Gain Coefficient (SHGC) Matrix

Glass SHGC [a.] [b.] [c.]	Overall SHGC [d.]
0.75	0.58
0.70	0.54
0.65	0.51
0.60	0.47
0.55	0.43
0.50	0.39
0.45	0.36
0.40	0.32
0.35	0.28
0.30	0.24
0.25	0.21
0.20	0.17
0.15	0.13
0.10	0.10
0.05	0.06

[a.] SHGC values are determined in accordance with NFRC 200.

[b.] For glass values that are not listed, linear interpolation is permitted.

[c.] Glass properties are based on center-of-glass values and are obtained from your glass supplier.

[d.] Overall SHGC values are based on the standard NFRC specimen size of 1,500 mm wide by 600 mm high (59-1/6" by 23-5/8").

Laws and building and safety codes governing the design and use of Kawneer products vary widely. Kawneer does not control the selection of its products and assumes no responsibility therefor. See full disclaimer at end of document.
© 2020, Kawneer Company, Inc.

System Visible Transmittance (VT) - AW (Deep) - Project-Out Window with 1-3/4" Glazing

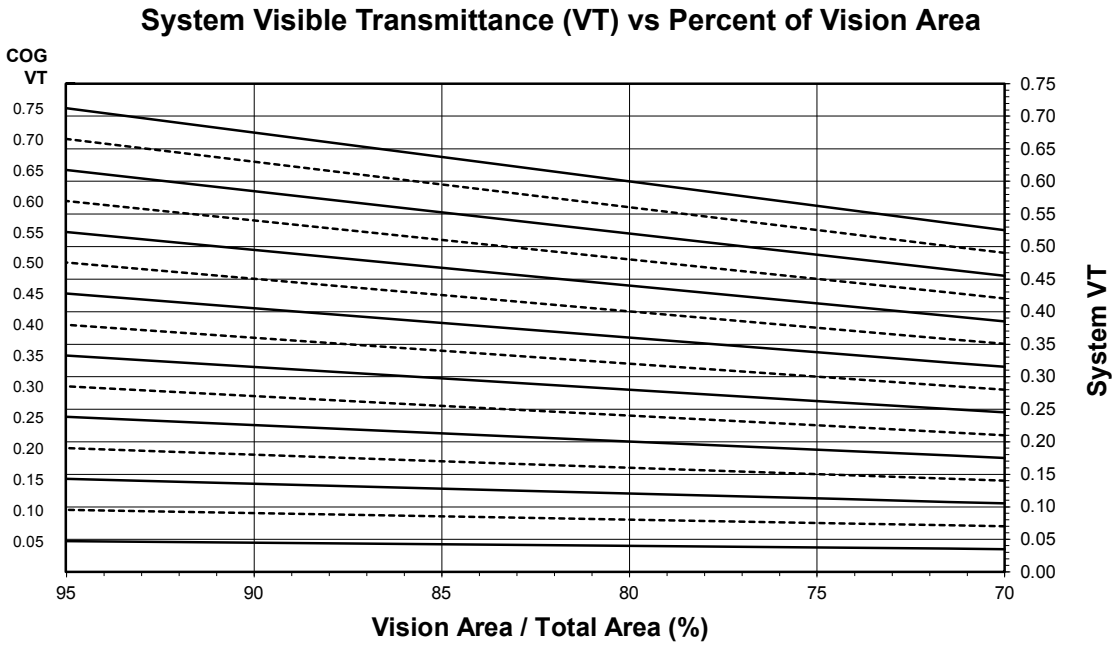

See Note, page 29.

Visible Transmittance (VT)

Glass VT [a. b. c.]	Overall VT [d.]
0.75	0.56
0.70	0.52
0.65	0.48
0.60	0.45
0.55	0.41
0.50	0.37
0.45	0.33
0.40	0.30
0.35	0.26
0.30	0.22
0.25	0.19
0.20	0.15
0.15	0.11
0.10	0.07
0.05	0.04

[a.] VT values are determined in accordance with NFRC 200.

[b.] For glass values that are not listed, linear interpolation is permitted.

[c.] Glass properties are based on center-of-glass values and are obtained from your glass supplier.

[d.] Overall VT values are based on the standard NFRC specimen size of 1,500 mm wide by 600 mm high (59-1/6" by 23-5/8").

Laws and building and safety codes governing the design and use of Kawneer products vary widely. Kawneer does not control the selection of its products and assumes no responsibility therefor. See full disclaimer at end of document.
© 2020, Kawneer Company, Inc.

May, 2026
97911-351
ADME077EN

AW (Deep) - Outswing Casement Window with 1" Glazing (Warm-Edge Glazing Spacer)

NOTE

These notes apply to the charts for system U-factor, solar heat gain coefficient (SHGC), and visible transmittance (VT):

- Values in parentheses are metric.
- COG = Center of Glass
- Charts are generated per AAMA 507.
- For glass values that are not listed, linear interpolation is permitted.
- Glass properties are based on center-of-glass values and are obtained from your glass supplier.

System U-factor for Glass Area

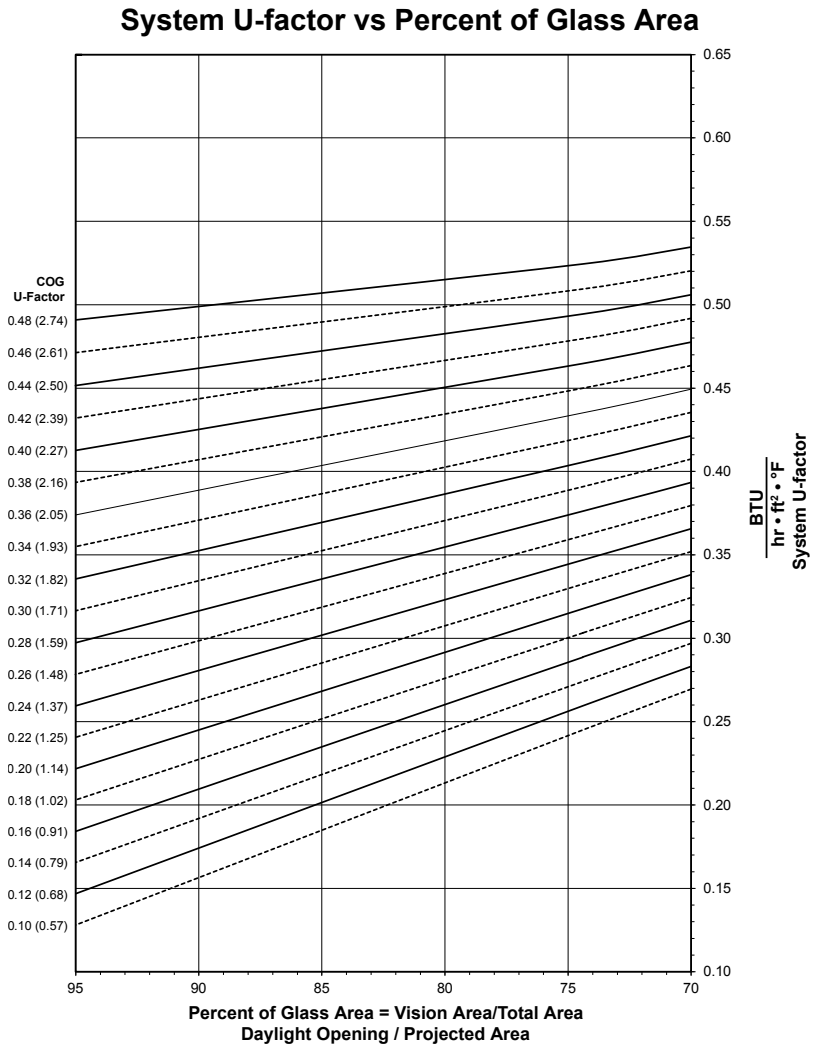

See Note, page 33.

Laws and building and safety codes governing the design and use of Kawneer products vary widely. Kawneer does not control the selection of its products and assumes no responsibility therefor. See full disclaimer at end of document.
© 2020, Kawneer Company, Inc.

AW (Deep) - Outswing Casement Window with 1" Glazing

Thermal Transmittance (BTU/hr • ft^2 • °F)

Glass U-factor [a. b. c.]	Overall U-factor [d.]
0.48	0.52
0.46	0.51
0.44	0.49
0.42	0.48
0.40	0.46
0.38	0.45
0.36	0.44
0.34	0.42
0.32	0.41
0.30	0.39
0.28	0.38
0.26	0.36
0.24	0.35
0.22	0.33
0.20	0.32
0.18	0.30
0.16	0.29
0.14	0.27
0.12	0.26
0.10	0.24

[a.] U-factor values are determined in accordance with NFRC 100.

[b.] For glass values that are not listed, linear interpolation is permitted.

[c.] Glass properties are based on center-of-glass values and are obtained from your glass supplier.

[d.] Overall U-factor values are based on the standard NFRC specimen size of 1,500 mm wide by 600 mm high (59-1/6" by 23-5/8").

Laws and building and safety codes governing the design and use of Kawneer products vary widely. Kawneer does not control the selection of its products and assumes no responsibility therefor. See full disclaimer at end of document.
© 2020, Kawneer Company, Inc.

May, 2026
97911-351
ADME077EN

System Solar Heat Gain Coefficient (SHGC) - AW (Deep) - Outswing Casement Window with 1" Glazing

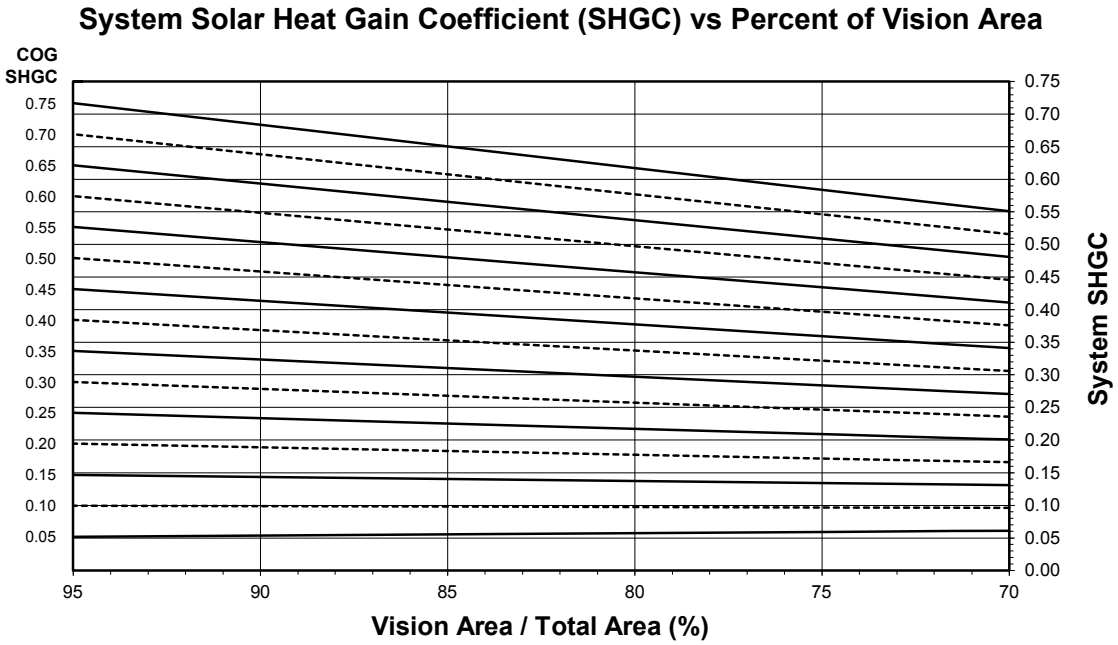

See Note, page 33.

Solar Heat Gain Coefficient (SHGC) Matrix

Glass SHGC [a.] [b.] [c.]	Overall SHGC [d.]
0.75	0.58
0.70	0.54
0.65	0.51
0.60	0.47
0.55	0.43
0.50	0.39
0.45	0.36
0.40	0.32
0.35	0.28
0.30	0.25
0.25	0.21
0.20	0.17
0.15	0.13
0.10	0.10
0.05	0.06

[a.] SHGC values are determined in accordance with NFRC 200.

[b.] For glass values that are not listed, linear interpolation is permitted.

[c.] Glass properties are based on center-of-glass values and are obtained from your glass supplier.

[d.] Overall SHGC values are based on the standard NFRC specimen size of 1,500 mm wide by 600 mm high (59-1/6" by 23-5/8").

Laws and building and safety codes governing the design and use of Kawneer products vary widely. Kawneer does not control the selection of its products and assumes no responsibility therefor. See full disclaimer at end of document.
© 2020, Kawneer Company, Inc.

System Visible Transmittance (VT) - AW (Deep) - Outswing Casement Window with 1" Glazing

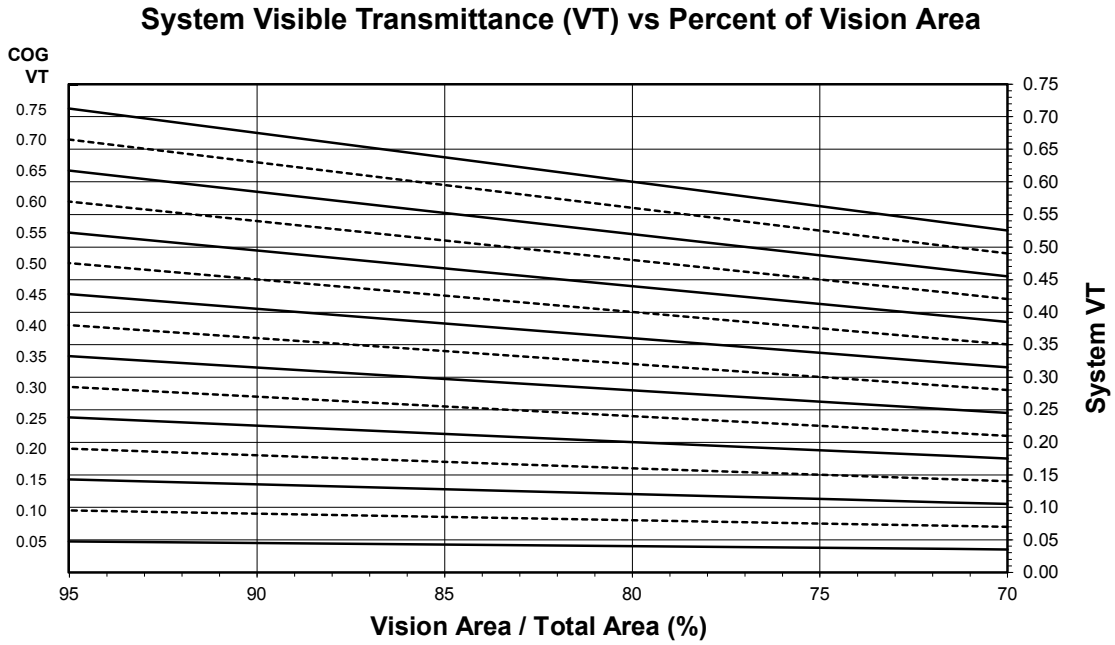

See Note, page 33.

Visible Transmittance (VT)

Glass VT [a. b. c.]	Overall VT [d.]
0.75	0.56
0.70	0.52
0.65	0.48
0.60	0.45
0.55	0.41
0.50	0.37
0.45	0.33
0.40	0.30
0.35	0.26
0.30	0.22
0.25	0.19
0.20	0.15
0.15	0.11
0.10	0.07
0.05	0.04

[a.] VT values are determined in accordance with NFRC 200.

[b.] For glass values that are not listed, linear interpolation is permitted.

[c.] Glass properties are based on center-of-glass values and are obtained from your glass supplier.

[d.] Overall VT values are based on the standard NFRC specimen size of 1,500 mm wide by 600 mm high (59-1/6" by 23-5/8").

Laws and building and safety codes governing the design and use of Kawneer products vary widely. Kawneer does not control the selection of its products and assumes no responsibility therefor. See full disclaimer at end of document.
© 2020, Kawneer Company, Inc.

AW (Deep) - Outswing Casement Window with 1-3/4" Glazing (Warm-Edge Glazing Spacer)

NOTE

These notes apply to the charts for system U-factor, solar heat gain coefficient (SHGC), and visible transmittance (VT):

- Values in parentheses are metric.
- COG = Center of Glass
- Charts are generated per AAMA 507.
- For glass values that are not listed, linear interpolation is permitted.
- Glass properties are based on center-of-glass values and are obtained from your glass supplier.

System U-factor for Glass Area

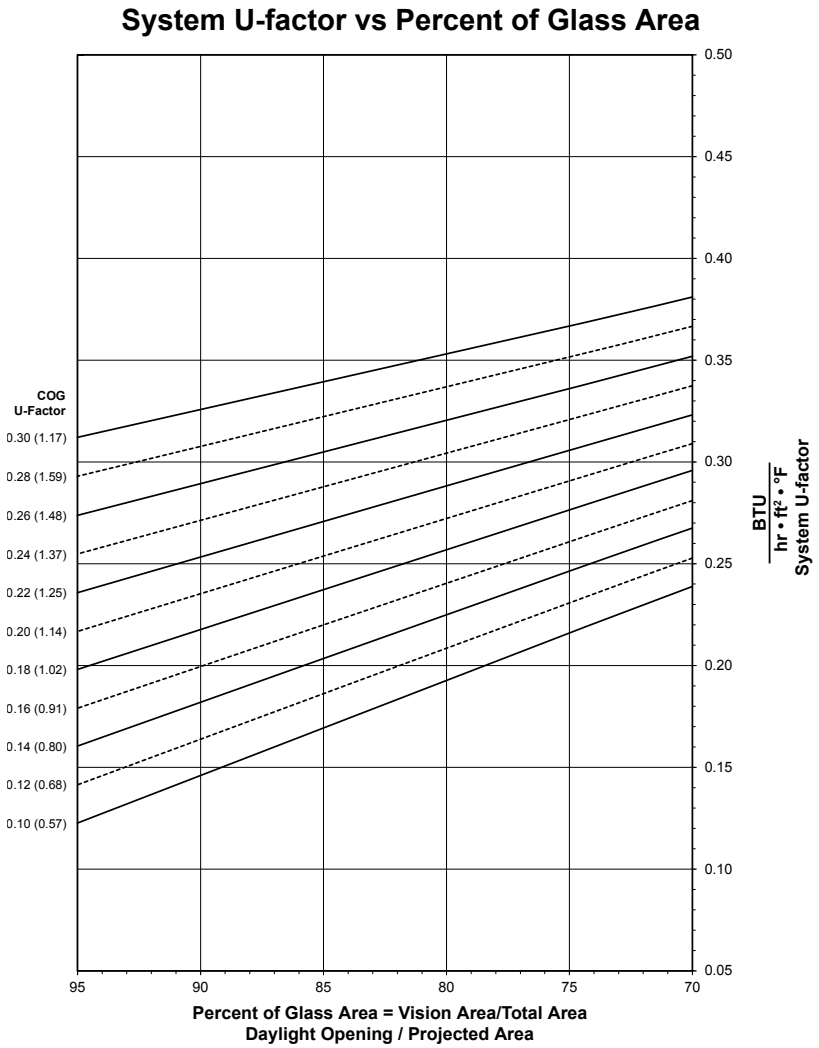

See Note, page 37.

Laws and building and safety codes governing the design and use of Kawneer products vary widely. Kawneer does not control the selection of its products and assumes no responsibility therefor. See full disclaimer at end of document.
© 2020, Kawneer Company, Inc.

AW (Deep) - Outswing Casement Window with 1-3/4" Glazing

Thermal Transmittance (BTU/hr • ft^2 • °F)

Glass U-factor [a. b. c.]	Overall U-factor [d.]
0.30	0.37
0.28	0.35
0.26	0.34
0.24	0.32
0.22	0.31
0.20	0.29
0.18	0.28
0.16	0.26
0.14	0.25
0.12	0.23
0.10	0.22

[a.] U-factor values are determined in accordance with NFRC 100.

[b.] For glass values that are not listed, linear interpolation is permitted.

[c.] Glass properties are based on center-of-glass values and are obtained from your glass supplier.

[d.] Overall U-factor values are based on the standard NFRC specimen size of 1,500 mm wide by 600 mm high (59-1/6" by 23-5/8").

Laws and building and safety codes governing the design and use of Kawneer products vary widely. Kawneer does not control the selection of its products and assumes no responsibility therefor. See full disclaimer at end of document.
© 2020, Kawneer Company, Inc.

May, 2026
97911-351
ADME077EN

System Solar Heat Gain Coefficient (SHGC) - AW (Deep) - Outswing Casement Window with 1-3/4" Glazing

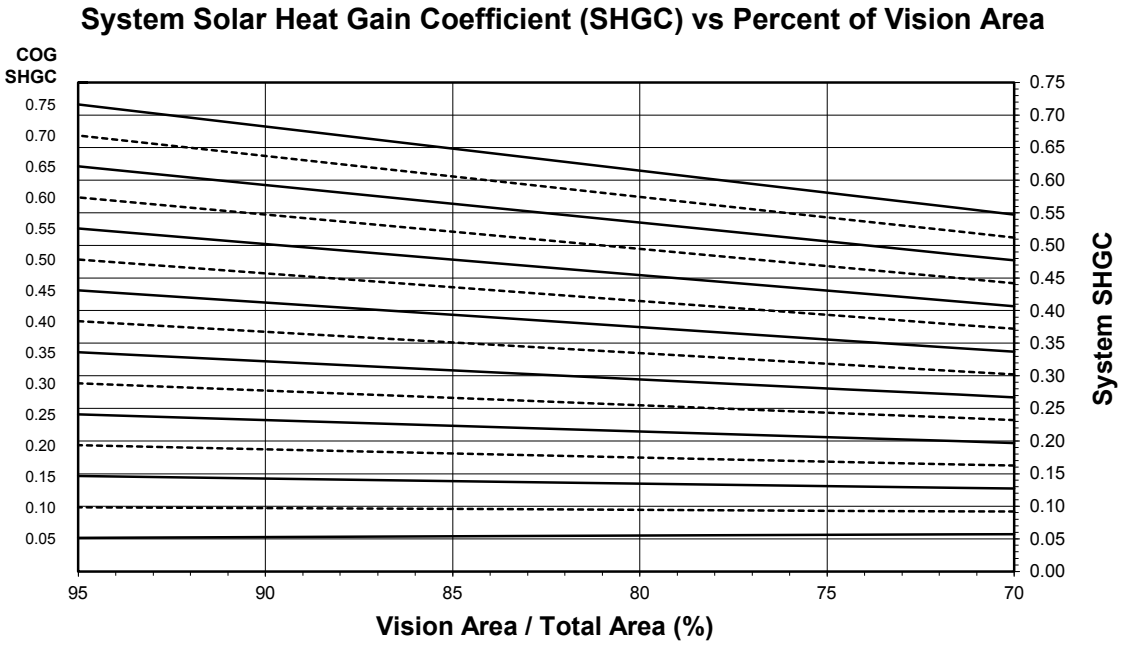

See Note, page 37.

Solar Heat Gain Coefficient (SHGC) Matrix

Glass SHGC [a.] [b.] [c.]	Overall SHGC [d.]
0.75	0.58
0.70	0.54
0.65	0.50
0.60	0.47
0.55	0.43
0.50	0.39
0.45	0.35
0.40	0.32
0.35	0.28
0.30	0.24
0.25	0.20
0.20	0.17
0.15	0.13
0.10	0.09
0.05	0.06

[a.] SHGC values are determined in accordance with NFRC 200.

[b.] For glass values that are not listed, linear interpolation is permitted.

[c.] Glass properties are based on center-of-glass values and are obtained from your glass supplier.

[d.] Overall SHGC values are based on the standard NFRC specimen size of 1,500 mm wide by 600 mm high (59-1/6" by 23-5/8").

Laws and building and safety codes governing the design and use of Kawneer products vary widely. Kawneer does not control the selection of its products and assumes no responsibility therefor. See full disclaimer at end of document.
© 2020, Kawneer Company, Inc.

System Visible Transmittance (VT) - AW (Deep) - Outswing Casement Window with 1-3/4" Glazing

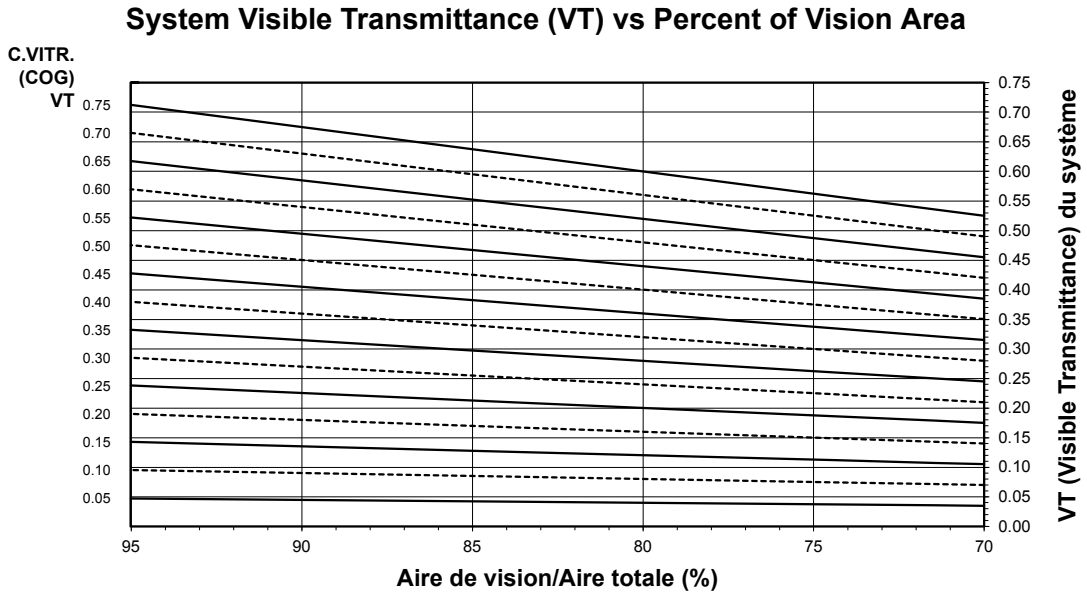

See Note, page 37.

Visible Transmittance (VT)

Glass VT [a. b. c.]	Overall VT [d.]
0.75	0.56
0.70	0.52
0.65	0.48
0.60	0.45
0.55	0.41
0.50	0.37
0.45	0.33
0.40	0.30
0.35	0.26
0.30	0.22
0.25	0.19
0.20	0.15
0.15	0.11
0.10	0.07
0.05	0.04

[a.] VT values are determined in accordance with NFRC 200.

[b.] For glass values that are not listed, linear interpolation is permitted.

[c.] Glass properties are based on center-of-glass values and are obtained from your glass supplier.

[d.] Overall VT values are based on the standard NFRC specimen size of 1,500 mm wide by 600 mm high (59-1/6" by 23-5/8").

Laws and building and safety codes governing the design and use of Kawneer products vary widely. Kawneer does not control the selection of its products and assumes no responsibility therefor. See full disclaimer at end of document.
© 2020, Kawneer Company, Inc.

May, 2026
97911-351
ADME077EN

AW (Deep) - Project-Out Window with 1" Glazing (Aluminum Glazing Spacer)

NOTE

These notes apply to the charts for system U-factor, solar heat gain coefficient (SHGC), and visible transmittance (VT):

- Values in parentheses are metric.
- COG = Center of Glass
- Charts are generated per AAMA 507.
- For glass values that are not listed, linear interpolation is permitted.
- Glass properties are based on center-of-glass values and are obtained from your glass supplier.

System U-factor for Glass Area

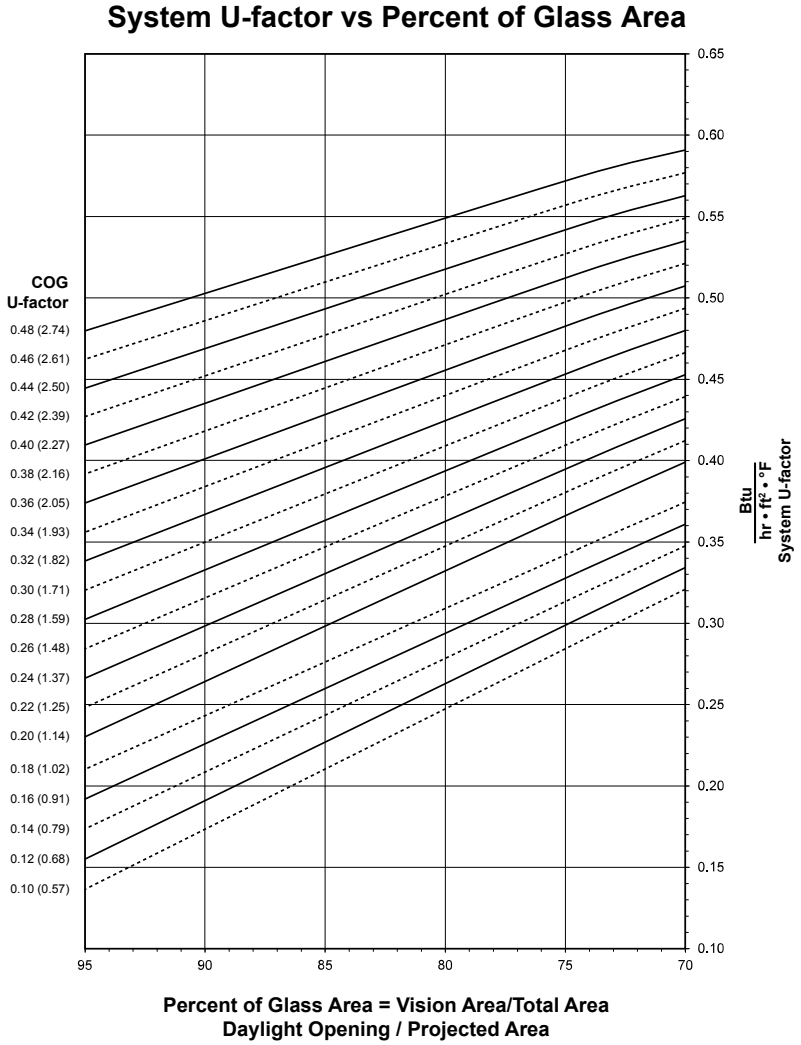

See Note, page 41.

Laws and building and safety codes governing the design and use of Kawneer products vary widely. Kawneer does not control the selection of its products and assumes no responsibility therefor. See full disclaimer at end of document.
© 2020, Kawneer Company, Inc.

AW (Deep) - Project-Out Window with 1" Glazing

Thermal Transmittance (BTU/hr • ft^2 • °F)

Glass U-factor [a. b. c.]	Overall U-factor [d.]
0.48	0.57
0.46	0.56
0.44	0.54
0.42	0.53
0.40	0.52
0.38	0.50
0.36	0.49
0.34	0.47
0.32	0.46
0.30	0.44
0.28	0.43
0.26	0.41
0.24	0.40
0.22	0.38
0.20	0.37

[a.] U-factor values are determined in accordance with NFRC 100.

[b.] For glass values that are not listed, linear interpolation is permitted.

[c.] Glass properties are based on center-of-glass values and are obtained from your glass supplier.

[d.] Overall U-factor values are based on the standard NFRC specimen size of 1,500 mm wide by 600 mm high (59-1/6" by 23-5/8").

Laws and building and safety codes governing the design and use of Kawneer products vary widely. Kawneer does not control the selection of its products and assumes no responsibility therefor. See full disclaimer at end of document.
© 2020, Kawneer Company, Inc.

System Solar Heat Gain Coefficient (SHGC) - AW (Deep) - Project-Out Window with 1" Glazing

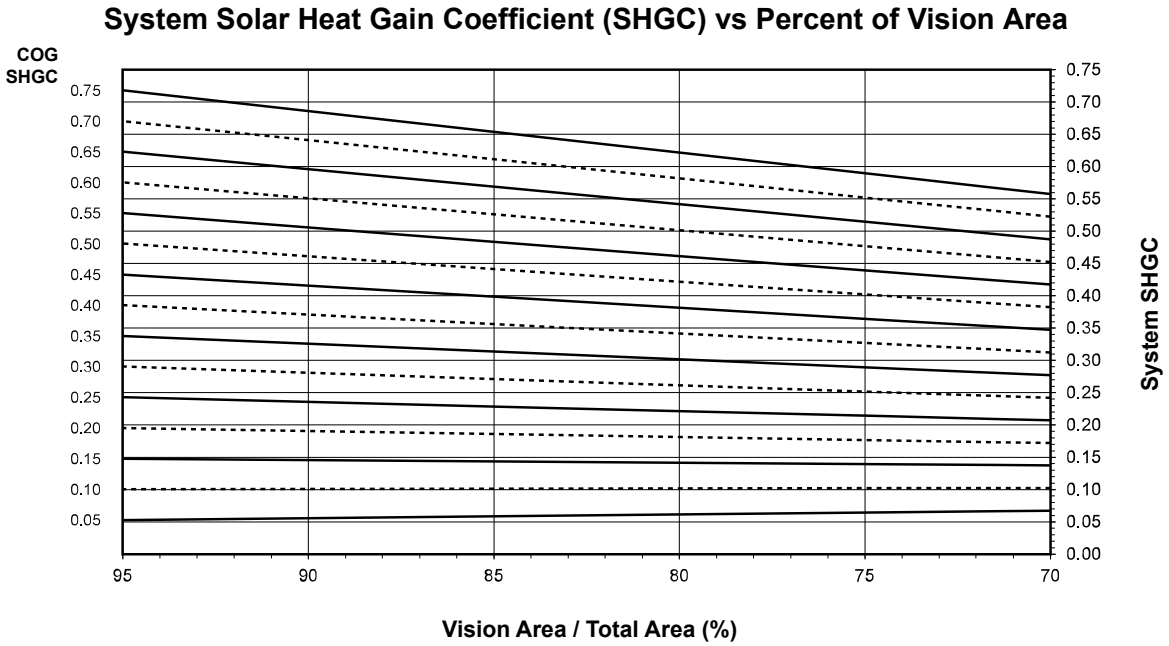

See Note, page 41.

Solar Heat Gain Coefficient (SHGC) Matrix

Glass SHGC [a.] [b.] [c.]	Overall SHGC [d.]
0.75	0.59
0.70	0.55
0.65	0.51
0.60	0.47
0.55	0.44
0.50	0.40
0.45	0.36
0.40	0.33
0.35	0.29
0.30	0.25
0.25	0.21
0.20	0.18
0.15	0.14
0.10	0.10
0.05	0.06

[a.] SHGC values are determined in accordance with NFRC 200.

[b.] For glass values that are not listed, linear interpolation is permitted.

[c.] Glass properties are based on center-of-glass values and are obtained from your glass supplier.

[d.] Overall SHGC values are based on the standard NFRC specimen size of 1,500 mm wide by 600 mm high (59-1/6" by 23-5/8").

Laws and building and safety codes governing the design and use of Kawneer products vary widely. Kawneer does not control the selection of its products and assumes no responsibility therefor. See full disclaimer at end of document.
© 2020, Kawneer Company, Inc.

System Visible Transmittance (VT) - AW (Deep) - Project-Out Window with 1" Glazing

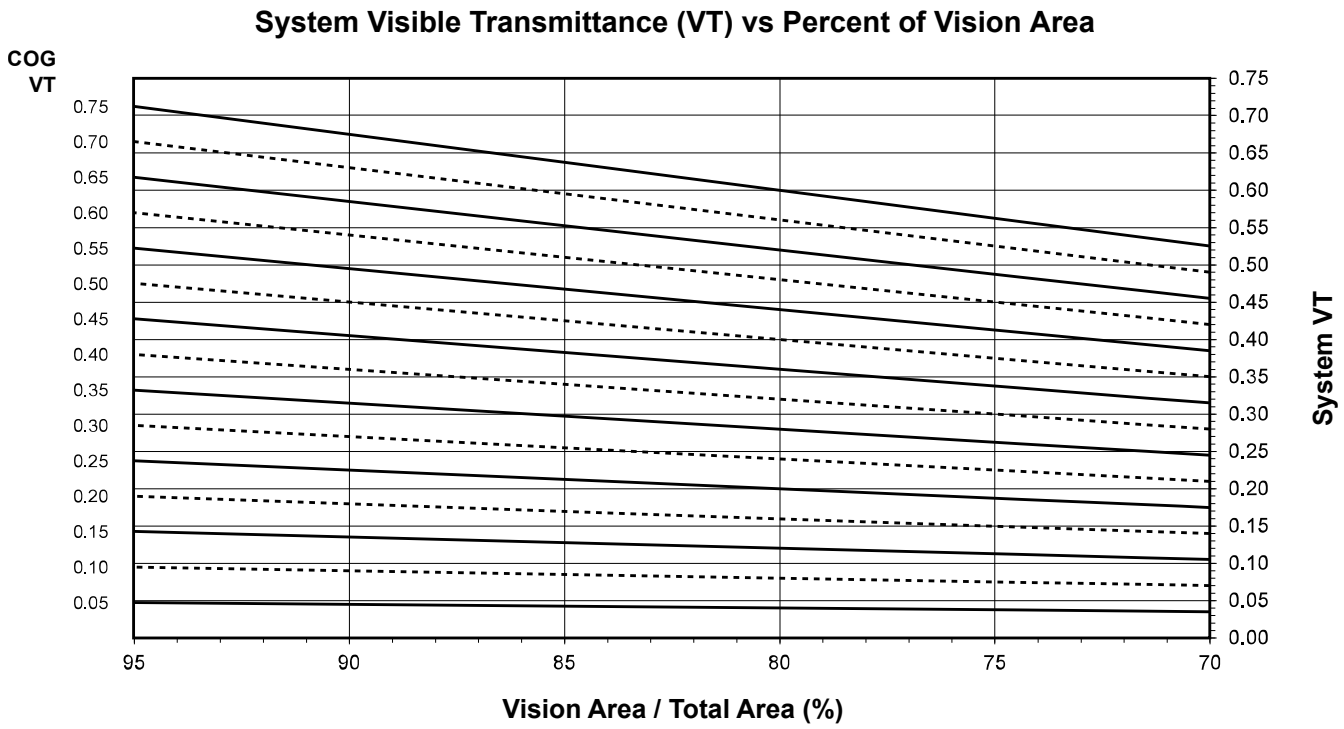

See Note, page 41.

Visible Transmittance (VT)

Glass VT [a. b. c.]	Overall VT [d.]
0.75	0.56
0.70	0.52
0.65	0.48
0.60	0.45
0.55	0.41
0.50	0.37
0.45	0.33
0.40	0.30
0.35	0.26
0.30	0.22
0.25	0.19
0.20	0.15
0.15	0.11
0.10	0.07
0.05	0.04

[a.] VT values are determined in accordance with NFRC 200.

[b.] For glass values that are not listed, linear interpolation is permitted.

[c.] Glass properties are based on center-of-glass values and are obtained from your glass supplier.

[d.] Overall VT values are based on the standard NFRC specimen size of 1,500 mm wide by 600 mm high (59-1/6" by 23-5/8").

Laws and building and safety codes governing the design and use of Kawneer products vary widely. Kawneer does not control the selection of its products and assumes no responsibility therefor. See full disclaimer at end of document.
© 2020, Kawneer Company, Inc.

May, 2026
97911-351
ADME077EN

AW (Deep) - Project-Out Window with 1-3/4" Glazing (Aluminum Glazing Spacer)

NOTE

These notes apply to the charts for system U-factor, solar heat gain coefficient (SHGC), and visible transmittance (VT):

- Values in parentheses are metric.
- COG = Center of Glass
- Charts are generated per AAMA 507.
- For glass values that are not listed, linear interpolation is permitted.
- Glass properties are based on center-of-glass values and are obtained from your glass supplier.

System U-factor for Glass Area

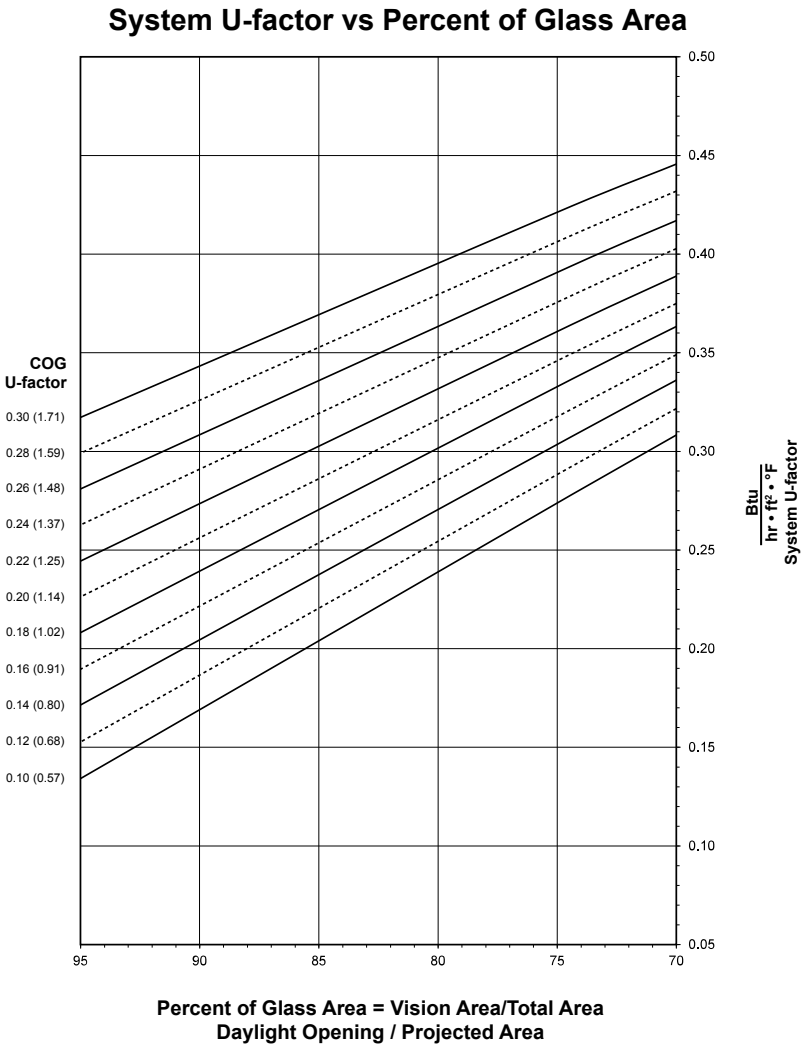

See Note, page 45.

Laws and building and safety codes governing the design and use of Kawneer products vary widely. Kawneer does not control the selection of its products and assumes no responsibility therefor. See full disclaimer at end of document.
© 2020, Kawneer Company, Inc.

AW (Deep) - Project-Out Window with 1-3/4" Glazing

Thermal Transmittance (BTU/hr • ft^2 • °F)

Glass U-factor [a. b. c.]	Overall U-factor [d.]
0.30	0.42
0.28	0.41
0.26	0.39
0.24	0.38
0.22	0.36
0.20	0.35
0.18	0.34
0.16	0.32
0.14	0.31
0.12	0.29
0.10	0.28

[a.] U-factor values are determined in accordance with NFRC 100.

[b.] For glass values that are not listed, linear interpolation is permitted.

[c.] Glass properties are based on center-of-glass values and are obtained from your glass supplier.

[d.] Overall U-factor values are based on the standard NFRC specimen size of 1,500 mm wide by 600 mm high (59-1/6" by 23-5/8").

Laws and building and safety codes governing the design and use of Kawneer products vary widely. Kawneer does not control the selection of its products and assumes no responsibility therefor. See full disclaimer at end of document.
© 2020, Kawneer Company, Inc.

May, 2026
97911-351
ADME077EN

System Solar Heat Gain Coefficient (SHGC) - AW (Deep) - Project-Out Window with 1-3/4" Glazing

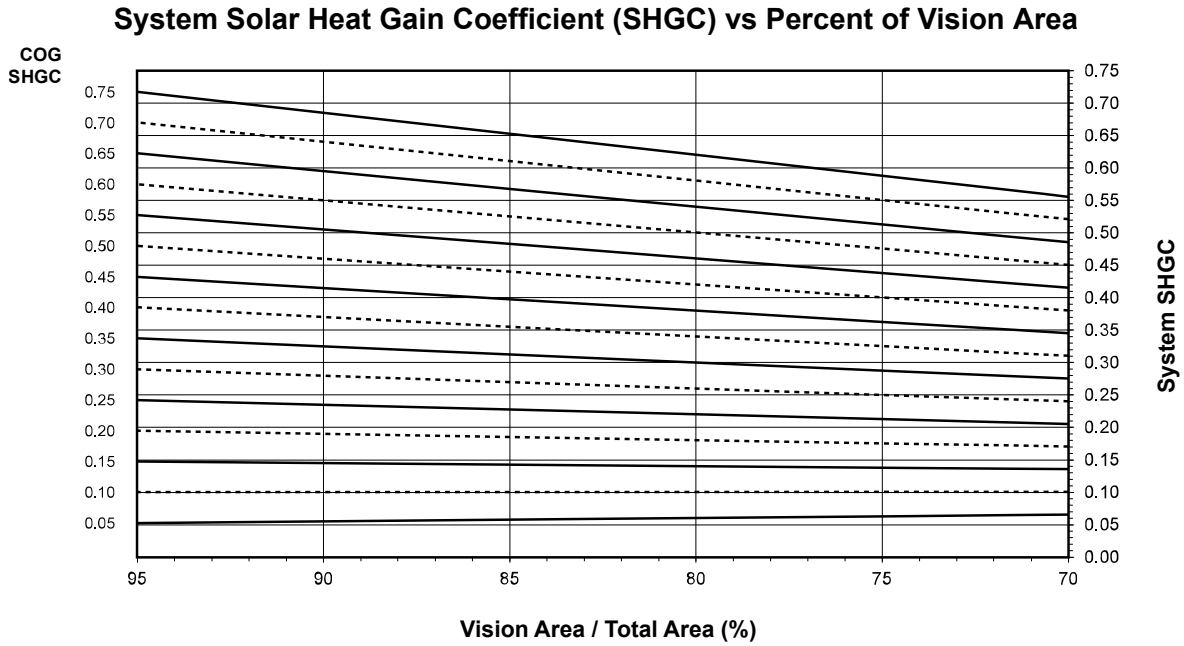

See Note, page 45.

Solar Heat Gain Coefficient (SHGC) Matrix

Glass SHGC [a.] [b.] [c.]	Overall SHGC [d.]
0.75	0.58
0.70	0.55
0.65	0.51
0.60	0.47
0.55	0.44
0.50	0.40
0.45	0.36
0.40	0.32
0.35	0.29
0.30	0.25
0.25	0.21
0.20	0.17
0.15	0.14
0.10	0.10
0.05	0.06

[a.] SHGC values are determined in accordance with NFRC 200.

[b.] For glass values that are not listed, linear interpolation is permitted.

[c.] Glass properties are based on center-of-glass values and are obtained from your glass supplier.

[d.] Overall SHGC values are based on the standard NFRC specimen size of 1,500 mm wide by 600 mm high (59-1/6" by 23-5/8").

Laws and building and safety codes governing the design and use of Kawneer products vary widely. Kawneer does not control the selection of its products and assumes no responsibility therefor. See full disclaimer at end of document.
© 2020, Kawneer Company, Inc.

System Visible Transmittance (VT) - AW (Deep) - Project-Out Window with 1-3/4" Glazing

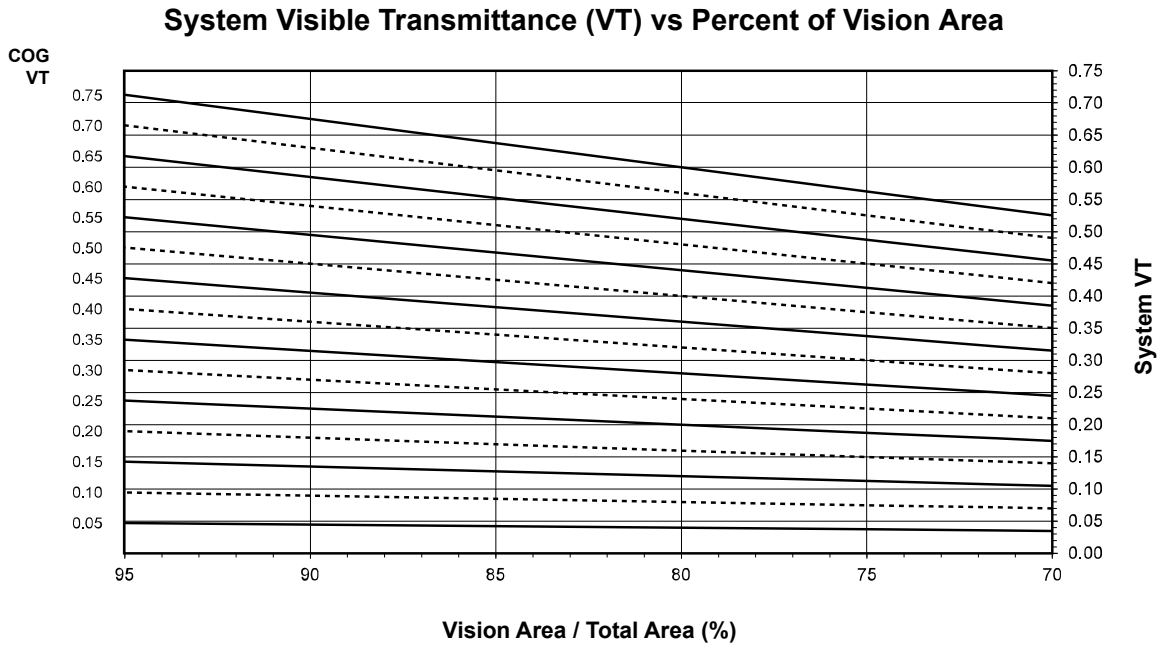

See Note, page 45.

Visible Transmittance (VT)

Glass VT [a. b. c.]	Overall VT [d.]
0.75	0.56
0.70	0.52
0.65	0.48
0.60	0.45
0.55	0.41
0.50	0.37
0.45	0.33
0.40	0.30
0.35	0.26
0.30	0.22
0.25	0.19
0.20	0.15
0.15	0.11
0.10	0.07
0.05	0.04

[a.] VT values are determined in accordance with NFRC 200.

[b.] For glass values that are not listed, linear interpolation is permitted.

[c.] Glass properties are based on center-of-glass values and are obtained from your glass supplier.

[d.] Overall VT values are based on the standard NFRC specimen size of 1,500 mm wide by 600 mm high (59-1/6" by 23-5/8").

Laws and building and safety codes governing the design and use of Kawneer products vary widely. Kawneer does not control the selection of its products and assumes no responsibility therefor. See full disclaimer at end of document.
© 2020, Kawneer Company, Inc.

May, 2026
97911-351
ADME077EN

AW (Deep) - Outswing Casement Window with 1" Glazing (Aluminum Glazing Spacer)

NOTE

These notes apply to the charts for system U-factor, solar heat gain coefficient (SHGC), and visible transmittance (VT):

- Values in parentheses are metric.
- COG = Center of Glass
- Charts are generated per AAMA 507.
- For glass values that are not listed, linear interpolation is permitted.
- Glass properties are based on center-of-glass values and are obtained from your glass supplier.

System U-factor for Glass Area

System U-factor vs Percent of Glass Area

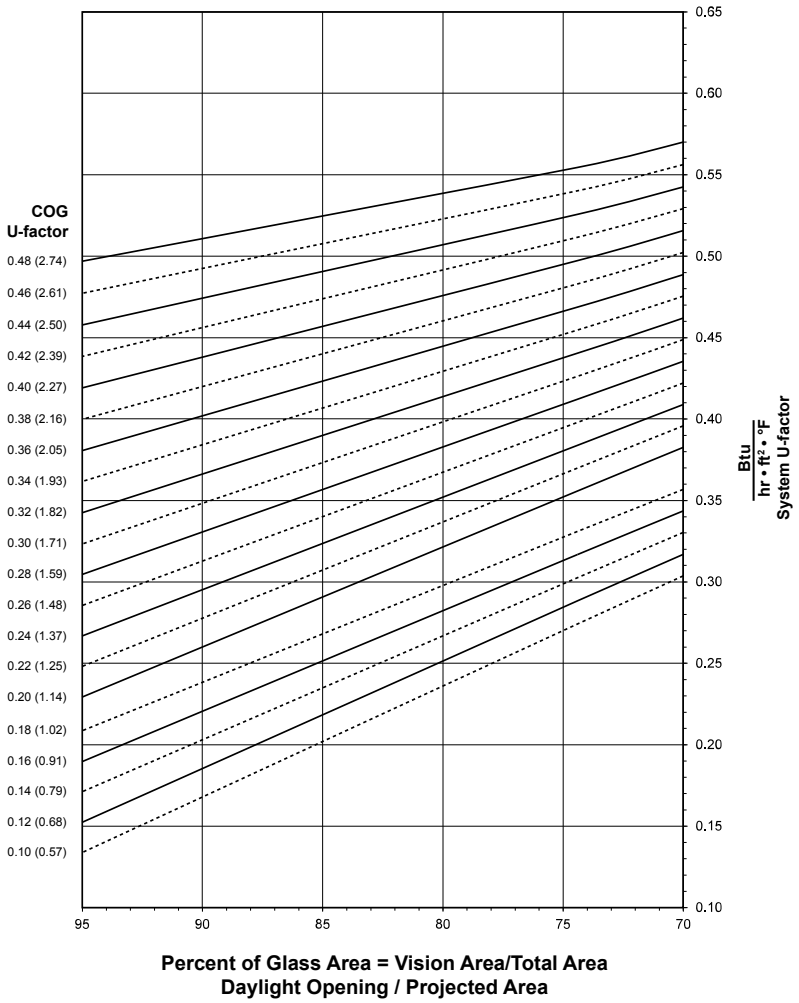

See Note, page 49.

Laws and building and safety codes governing the design and use of Kawneer products vary widely. Kawneer does not control the selection of its products and assumes no responsibility therefor. See full disclaimer at end of document.
© 2020, Kawneer Company, Inc.

AW (Deep) - Outswing Casement Window with 1" Glazing

Thermal Transmittance (BTU/hr • ft^2 • °F)

Glass U-factor [a. b. c.]	Overall U-factor [d.]
0.48	0.55
0.46	0.54
0.44	0.53
0.42	0.51
0.40	0.50
0.38	0.48
0.36	0.47
0.34	0.45
0.32	0.44
0.30	0.43
0.28	0.41
0.26	0.40
0.24	0.38
0.22	0.37
0.20	0.36
0.18	0.33
0.16	0.32
0.14	0.30
0.12	0.29
0.10	0.27

[a.] U-factor values are determined in accordance with NFRC 100.

[b.] For glass values that are not listed, linear interpolation is permitted.

[c.] Glass properties are based on center-of-glass values and are obtained from your glass supplier.

[d.] Overall U-factor values are based on the standard NFRC specimen size of 1,500 mm wide by 600 mm high (59-1/6" by 23-5/8").

Laws and building and safety codes governing the design and use of Kawneer products vary widely. Kawneer does not control the selection of its products and assumes no responsibility therefor. See full disclaimer at end of document.
© 2020, Kawneer Company, Inc.

System Solar Heat Gain Coefficient (SHGC) - AW (Deep) - Outswing Casement Window with 1" Glazing

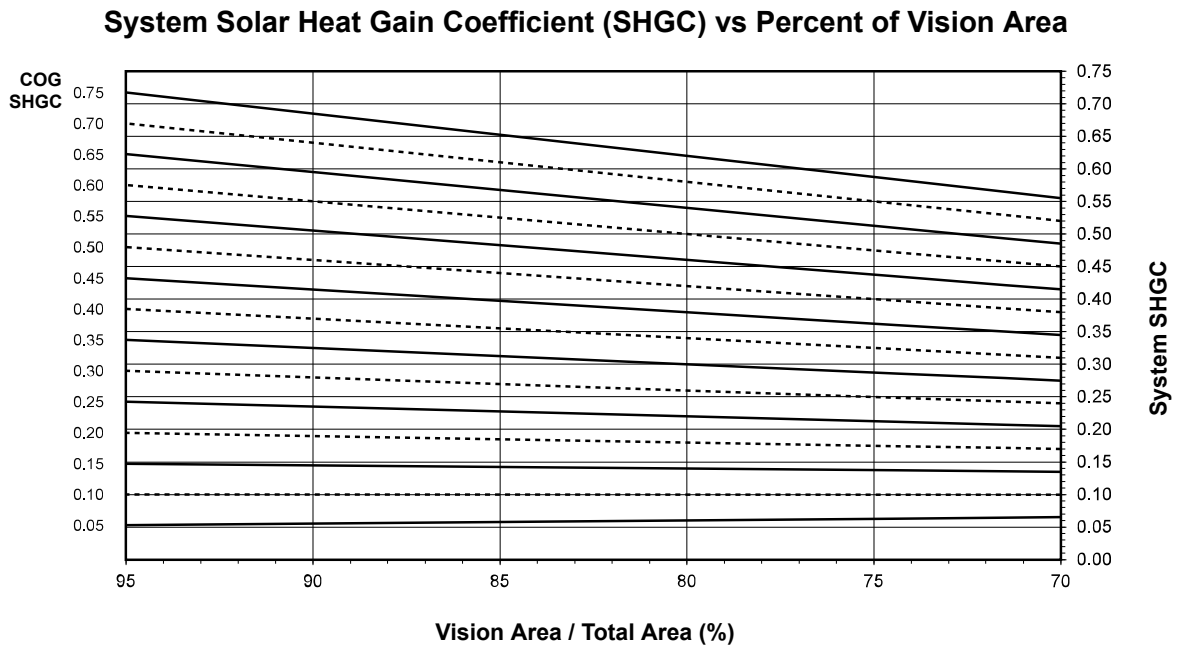

See Note, page 49.

Solar Heat Gain Coefficient (SHGC) Matrix

Glass SHGC [a.] [b.] [c.]	Overall SHGC [d.]
0.75	0.58
0.70	0.55
0.65	0.51
0.60	0.47
0.55	0.43
0.50	0.40
0.45	0.36
0.40	0.32
0.35	0.29
0.30	0.25
0.25	0.21
0.20	0.17
0.15	0.14
0.10	0.10
0.05	0.06

[a.] SHGC values are determined in accordance with NFRC 200.

[b.] For glass values that are not listed, linear interpolation is permitted.

[c.] Glass properties are based on center-of-glass values and are obtained from your glass supplier.

[d.] Overall SHGC values are based on the standard NFRC specimen size of 1,500 mm wide by 600 mm high (59-1/6" by 23-5/8").

Laws and building and safety codes governing the design and use of Kawneer products vary widely. Kawneer does not control the selection of its products and assumes no responsibility therefor. See full disclaimer at end of document.
© 2020, Kawneer Company, Inc.

System Visible Transmittance (VT) - AW (Deep) - Outswing Casement Window with 1" Glazing

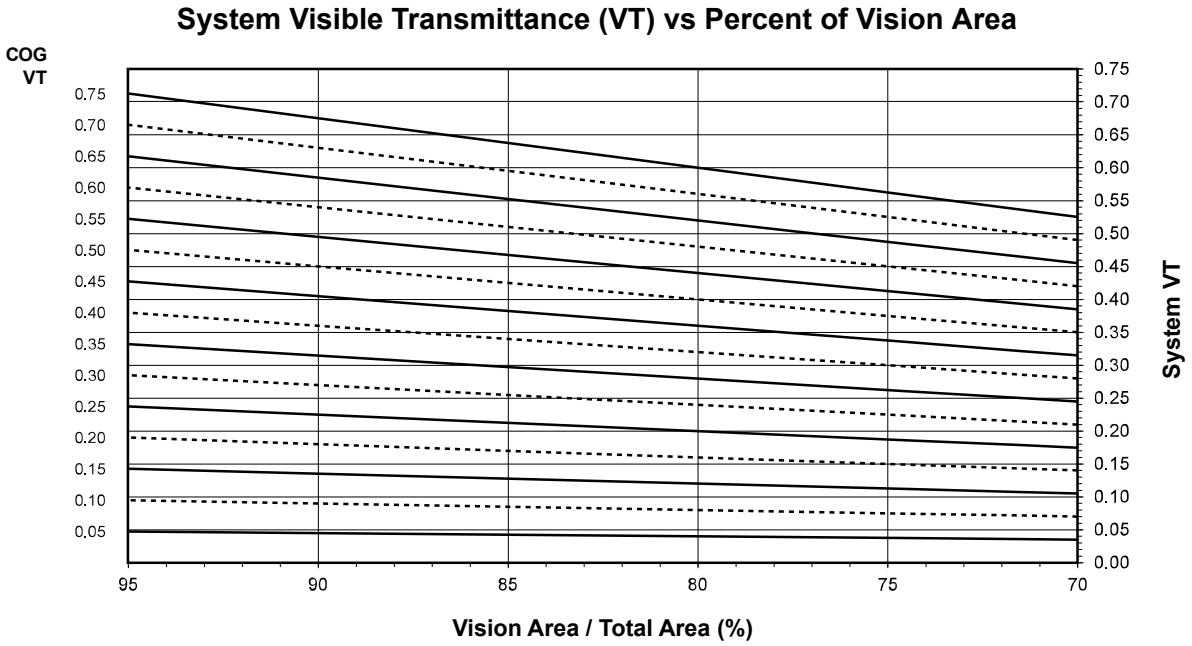

See Note, page 49.

Visible Transmittance (VT)

Glass VT [a.] [b.] [c.]	Overall VT [d.]
0.75	0.56
0.70	0.52
0.65	0.48
0.60	0.45
0.55	0.41
0.50	0.37
0.45	0.33
0.40	0.30
0.35	0.26
0.30	0.22
0.25	0.19
0.20	0.15
0.15	0.11
0.10	0.07
0.05	0.04

[a.] VT values are determined in accordance with NFRC 200.

[b.] For glass values that are not listed, linear interpolation is permitted.

[c.] Glass properties are based on center-of-glass values and are obtained from your glass supplier.

[d.] Overall VT values are based on the standard NFRC specimen size of 1,500 mm wide by 600 mm high (59-1/6" by 23-5/8").

Laws and building and safety codes governing the design and use of Kawneer products vary widely. Kawneer does not control the selection of its products and assumes no responsibility therefor. See full disclaimer at end of document.
© 2020, Kawneer Company, Inc.

AW (Deep) - Outswing Casement Window with 1-3/4" Glazing (Aluminum Glazing Spacer)

NOTE

These notes apply to the charts for system U-factor, solar heat gain coefficient (SHGC), and visible transmittance (VT):

- Values in parentheses are metric.
- COG = Center of Glass
- Charts are generated per AAMA 507.
- For glass values that are not listed, linear interpolation is permitted.
- Glass properties are based on center-of-glass values and are obtained from your glass supplier.

System U-factor for Glass Area

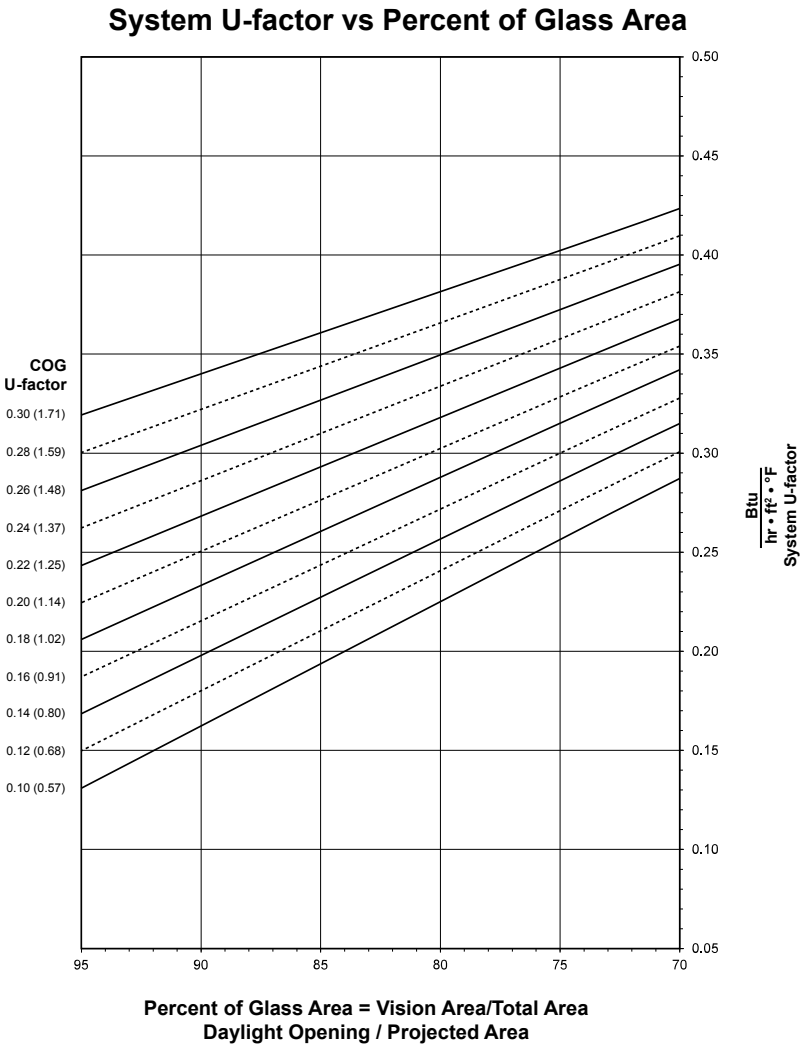

See Note, page 53.

Laws and building and safety codes governing the design and use of Kawneer products vary widely. Kawneer does not control the selection of its products and assumes no responsibility therefor. See full disclaimer at end of document.
© 2020, Kawneer Company, Inc.

AW (Deep) - Outswing Casement Window with 1-3/4" Glazing

Thermal Transmittance (BTU/hr • ft^2 • °F)

Glass U-factor [a. b. c.]	Overall U-factor [d.]
0.30	0.40
0.28	0.39
0.26	0.38
0.24	0.36
0.22	0.35
0.20	0.33
0.18	0.32
0.16	0.30
0.14	0.29
0.12	0.27
0.10	0.26

[a.] U-factor values are determined in accordance with NFRC 100.

[b.] For glass values that are not listed, linear interpolation is permitted.

[c.] Glass properties are based on center-of-glass values and are obtained from your glass supplier.

[d.] Overall U-factor values are based on the standard NFRC specimen size of 1,500 mm wide by 600 mm high (59-1/6" by 23-5/8").

Laws and building and safety codes governing the design and use of Kawneer products vary widely. Kawneer does not control the selection of its products and assumes no responsibility therefor. See full disclaimer at end of document.
© 2020, Kawneer Company, Inc.

System Solar Heat Gain Coefficient (SHGC) - AW (Deep) - Outswing Casement Window with 1-3/4" Glazing

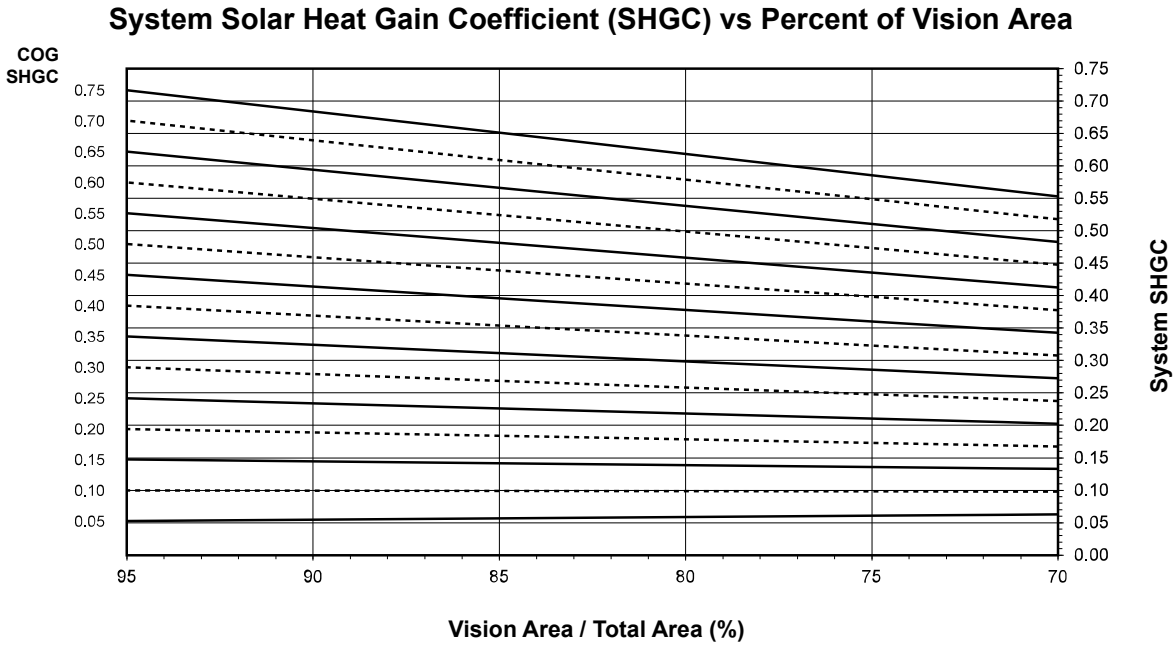

See Note, page 53.

Solar Heat Gain Coefficient (SHGC) Matrix

Glass SHGC [a.] [b.] [c.]	Overall SHGC [d.]
0.75	0.58
0.70	0.54
0.65	0.51
0.60	0.47
0.55	0.43
0.50	0.40
0.45	0.36
0.40	0.32
0.35	0.28
0.30	0.25
0.25	0.21
0.20	0.17
0.15	0.14
0.10	0.10
0.05	0.06

[a.] SHGC values are determined in accordance with NFRC 200.

[b.] For glass values that are not listed, linear interpolation is permitted.

[c.] Glass properties are based on center-of-glass values and are obtained from your glass supplier.

[d.] Overall SHGC values are based on the standard NFRC specimen size of 1,500 mm wide by 600 mm high (59-1/6" by 23-5/8").

Laws and building and safety codes governing the design and use of Kawneer products vary widely. Kawneer does not control the selection of its products and assumes no responsibility therefor. See full disclaimer at end of document.
© 2020, Kawneer Company, Inc.

System Visible Transmittance (VT) - AW (Deep) - Outswing Casement Window with 1-3/4" Glazing

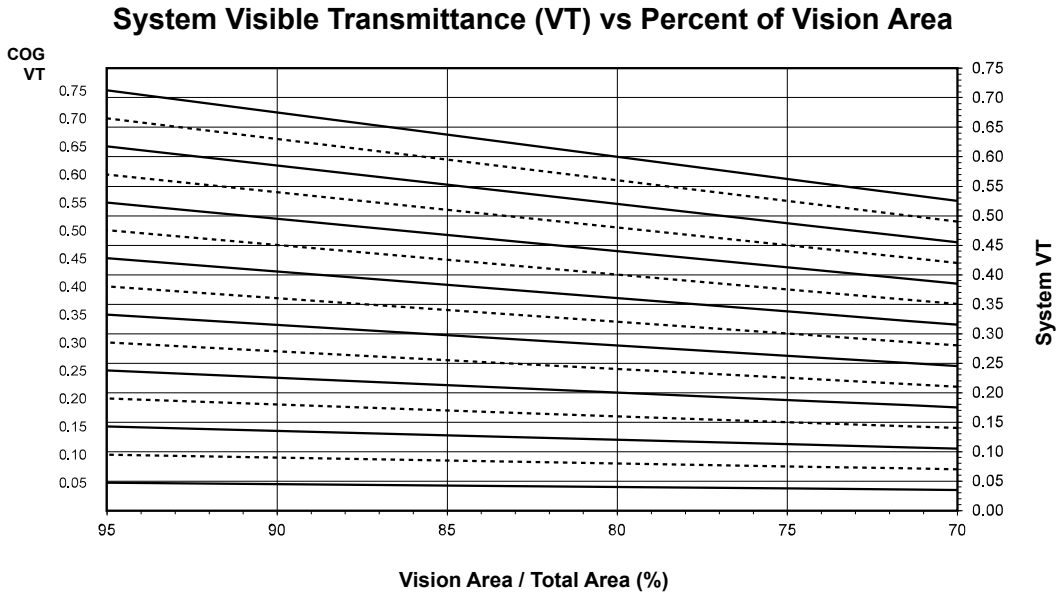

See Note, page 53.

Visible Transmittance (VT)

Glass VT [a. b. c.]	Overall VT [d.]
0.75	0.56
0.70	0.52
0.65	0.48
0.60	0.45
0.55	0.41
0.50	0.37
0.45	0.33
0.40	0.30
0.35	0.26
0.30	0.22
0.25	0.19
0.20	0.15
0.15	0.11
0.10	0.07
0.05	0.04

[a.] VT values are determined in accordance with NFRC 200.

[b.] For glass values that are not listed, linear interpolation is permitted.

[c.] Glass properties are based on center-of-glass values and are obtained from your glass supplier.

[d.] Overall VT values are based on the standard NFRC specimen size of 1,500 mm wide by 600 mm high (59-1/6" by 23-5/8").

Laws and building and safety codes governing the design and use of Kawneer products vary widely. Kawneer does not control the selection of its products and assumes no responsibility therefor. See full disclaimer at end of document.
© 2020, Kawneer Company, Inc.

CW (Shallow) - Project-Out Window with 1" Glazing (Aluminum Glazing Spacer)

NOTE

These notes apply to the charts for system U-factor, solar heat gain coefficient (SHGC), and visible transmittance (VT):

- Values in parentheses are metric.
- COG = Center of Glass
- Charts are generated per AAMA 507.
- For glass values that are not listed, linear interpolation is permitted.
- Glass properties are based on center-of-glass values and are obtained from your glass supplier.

System U-factor for Glass Area

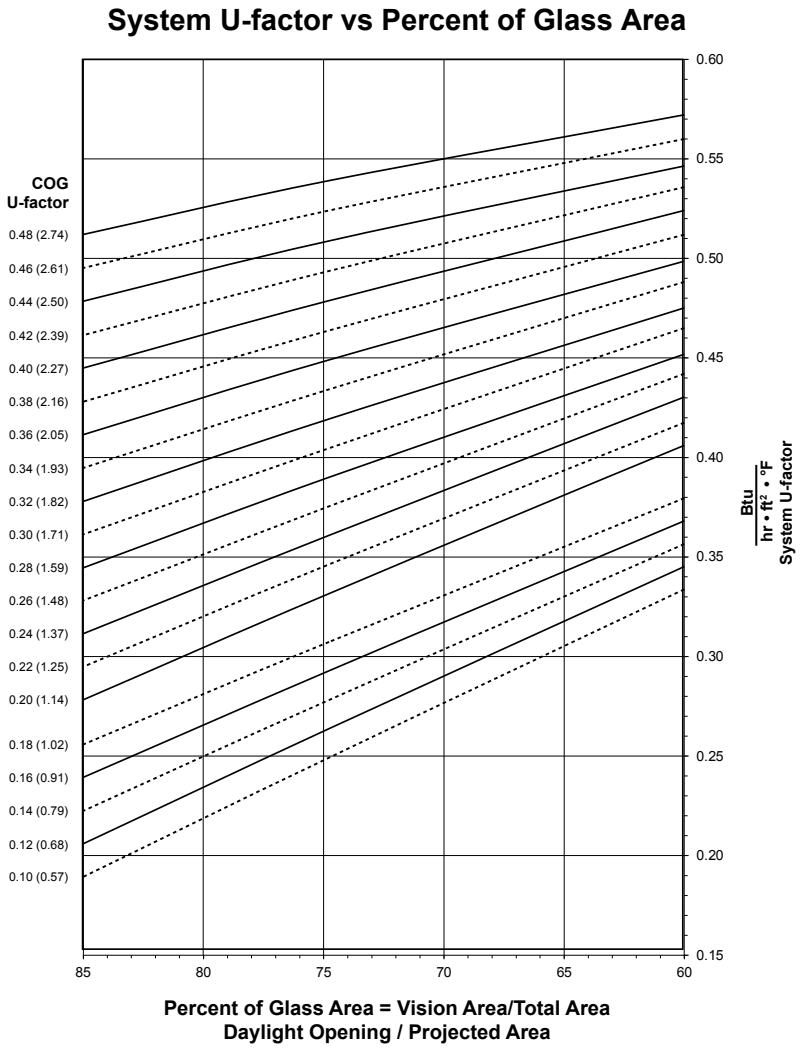

See Note, page 57.

Laws and building and safety codes governing the design and use of Kawneer products vary widely. Kawneer does not control the selection of its products and assumes no responsibility therefor. See full disclaimer at end of document.
© 2020, Kawneer Company, Inc.

CW (Shallow) - Project-Out Window with 1" Glazing

Thermal Transmittance (BTU/hr • ft^2 • °F)

Glass U-factor [a. b. c.]	Overall U-factor [d.]
0.48	0.54
0.46	0.52
0.44	0.51
0.42	0.49
0.40	0.48
0.38	0.46
0.36	0.45
0.34	0.43
0.32	0.42
0.30	0.40
0.28	0.39
0.26	0.38
0.24	036
0.22	0.35
0.20	0.33
0.18	0.31
0.16	0.29
0.14	0.28
0.12	0.26
0.10	0.25

[a.] U-factor values are determined in accordance with NFRC 100.

[b.] For glass values that are not listed, linear interpolation is permitted.

[c.] Glass properties are based on center-of-glass values and are obtained from your glass supplier.

[d.] Overall U-factor values are based on the standard NFRC specimen size of 1,500 mm wide by 600 mm high (59-1/6" by 23-5/8").

Laws and building and safety codes governing the design and use of Kawneer products vary widely. Kawneer does not control the selection of its products and assumes no responsibility therefor. See full disclaimer at end of document.
© 2020, Kawneer Company, Inc.

System Solar Heat Gain Coefficient (SHGC) - CW (Shallow) - Project-Out Window with 1" Glazing

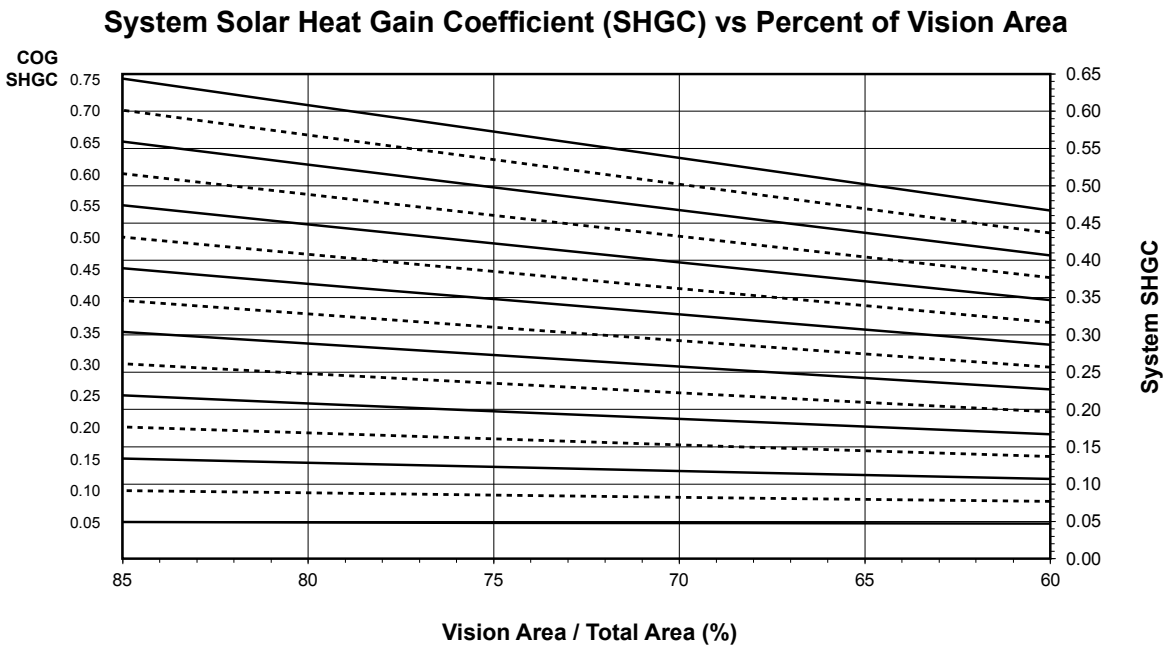

See Note, page 57.

Solar Heat Gain Coefficient (SHGC) Matrix

Glass SHGC [a.] [b.] [c.]	Overall SHGC [d.]
0.75	0.57
0.70	0.53
0.65	0.50
0.60	0.46
0.55	0.42
0.50	0.38
0.45	0.35
0.40	0.31
0.35	0.27
0.30	0.23
0.25	0.20
0.20	0.16
0.15	0.12
0.10	0.09
0.05	0.05

[a.] SHGC values are determined in accordance with NFRC 200.

[b.] For glass values that are not listed, linear interpolation is permitted.

[c.] Glass properties are based on center-of-glass values and are obtained from your glass supplier.

[d.] Overall SHGC values are based on the standard NFRC specimen size of 1,500 mm wide by 600 mm high (59-1/6" by 23-5/8").

Laws and building and safety codes governing the design and use of Kawneer products vary widely. Kawneer does not control the selection of its products and assumes no responsibility therefor. See full disclaimer at end of document.
© 2020, Kawneer Company, Inc.

System Visible Transmittance (VT) - CW (Shallow) - Project-Out Window with 1" Glazing

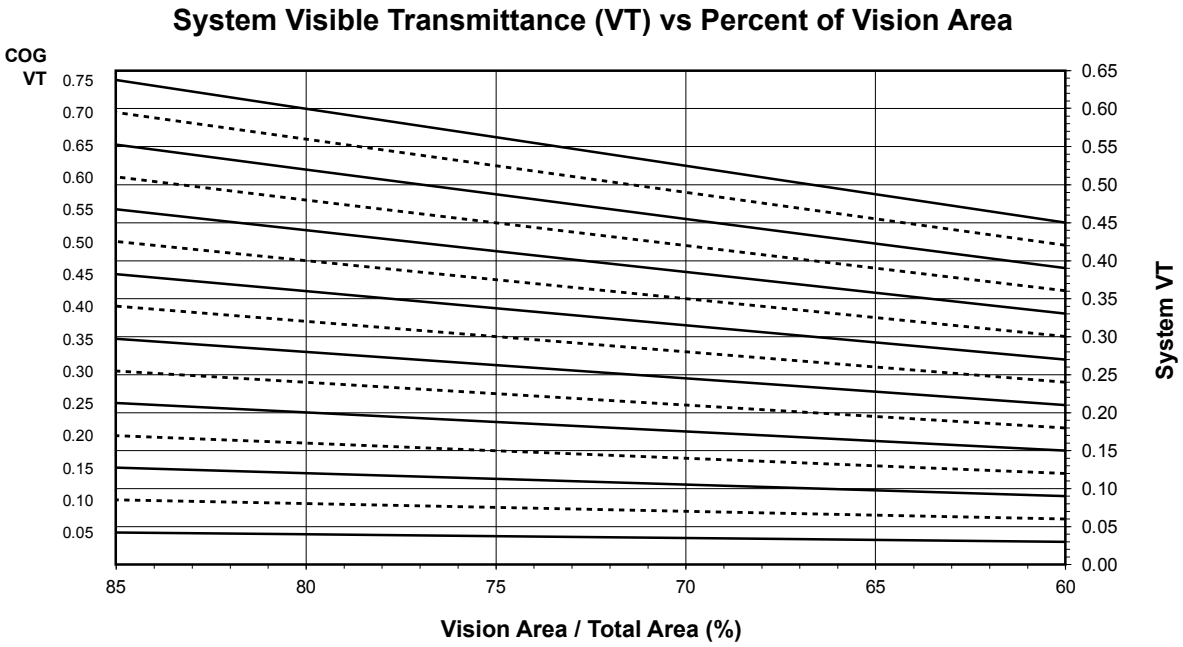

See Note, page 57.

Visible Transmittance (VT)

Glass VT [a. b. c.]	Overall VT [d.]
0.75	0.56
0.70	0.52
0.65	0.49
0.60	0.45
0.55	0.41
0.50	0.37
0.45	0.34
0.40	0.30
0.35	0.26
0.30	0.22
0.25	0.19
0.20	0.15
0.15	0.11
0.10	0.07
0.05	0.04

[a.] VT values are determined in accordance with NFRC 200.

[b.] For glass values that are not listed, linear interpolation is permitted.

[c.] Glass properties are based on center-of-glass values and are obtained from your glass supplier.

[d.] Overall VT values are based on the standard NFRC specimen size of 1,500 mm wide by 600 mm high (59-1/6" by 23-5/8").

Laws and building and safety codes governing the design and use of Kawneer products vary widely. Kawneer does not control the selection of its products and assumes no responsibility therefor. See full disclaimer at end of document.
© 2020, Kawneer Company, Inc.

May, 2026
97911-351
ADME077EN

CW (Shallow) - Project-Out Window with 1-3/4" Glazing (Aluminum Glazing Spacer)

NOTE

These notes apply to the charts for system U-factor, solar heat gain coefficient (SHGC), and visible transmittance (VT):

- Values in parentheses are metric.
- COG = Center of Glass
- Charts are generated per AAMA 507.
- For glass values that are not listed, linear interpolation is permitted.
- Glass properties are based on center-of-glass values and are obtained from your glass supplier.

System U-factor for Glass Area

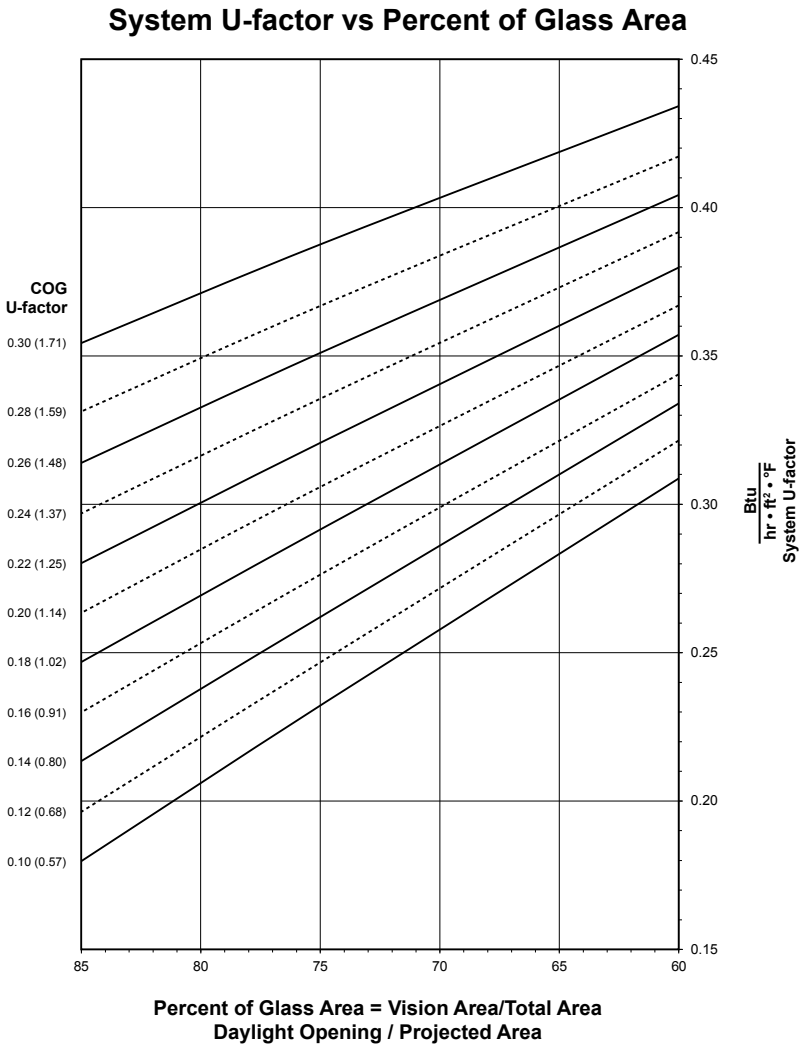

See Note, page 61.

Laws and building and safety codes governing the design and use of Kawneer products vary widely. Kawneer does not control the selection of its products and assumes no responsibility therefor. See full disclaimer at end of document.
© 2020, Kawneer Company, Inc.

CW (Shallow) - Project-Out Window with 1-3/4" Glazing

Thermal Transmittance (BTU/hr • ft^2 • °F)

Glass U-factor [a. b. c.]	Overall U-factor [d.]
0.31	0.39
0.28	0.37
0.26	0.35
0.24	0.34
0.22	0.32
0.20	0.31
0.18	0.29
0.16	0.28
0.14	0.26
0.12	0.25
0.10	0.23

[a.] U-factor values are determined in accordance with NFRC 100.

[b.] For glass values that are not listed, linear interpolation is permitted.

[c.] Glass properties are based on center-of-glass values and are obtained from your glass supplier.

[d.] Overall U-factor values are based on the standard NFRC specimen size of 1,500 mm wide by 600 mm high (59-1/6" by 23-5/8").

Laws and building and safety codes governing the design and use of Kawneer products vary widely. Kawneer does not control the selection of its products and assumes no responsibility therefor. See full disclaimer at end of document.
© 2020, Kawneer Company, Inc.

May, 2026
97911-351
ADME077EN

System Solar Heat Gain Coefficient (SHGC) - CW (Shallow) - Project-Out Window with 1-3/4" Glazing

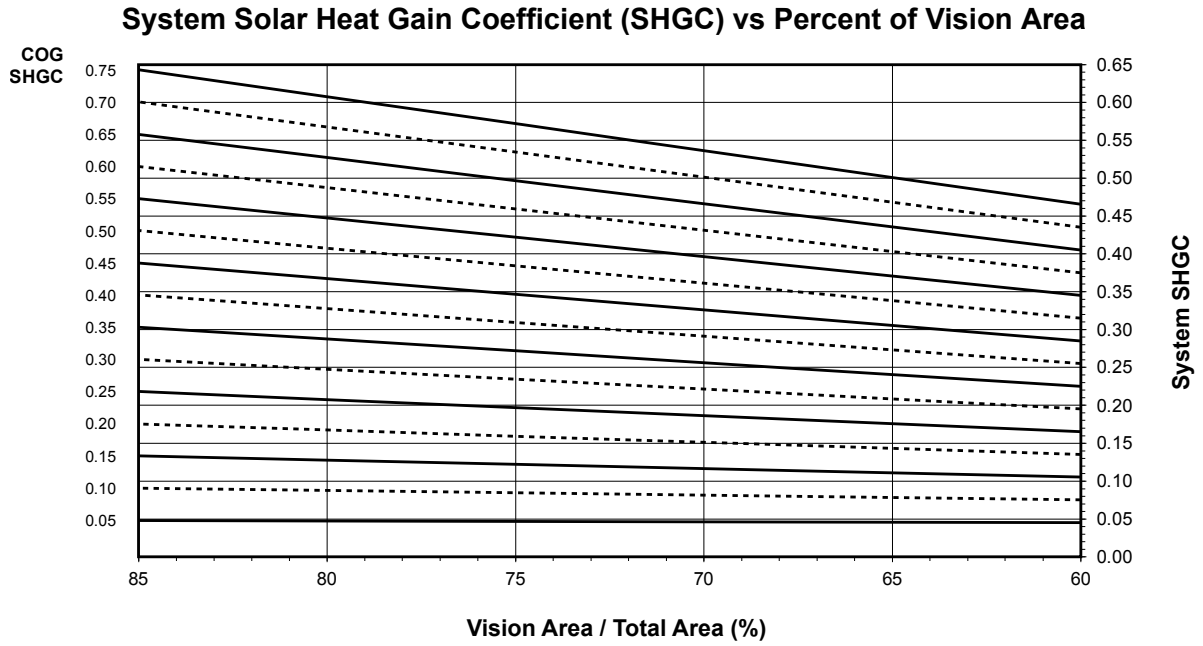

See Note, page 61.

Solar Heat Gain Coefficient (SHGC) Matrix

Glass SHGC [a.] [b.] [c.]	Overall SHGC [d.]
0.75	0.57
0.70	0.53
0.65	0.50
0.60	0.46
0.55	0.42
0.50	0.38
0.45	0.35
0.40	0.31
0.35	0.27
0.30	0.23
0.25	0.20
0.20	0.16
0.15	0.12
0.10	0.08
0.05	0.05

[a.] SHGC values are determined in accordance with NFRC 200.

[b.] For glass values that are not listed, linear interpolation is permitted.

[c.] Glass properties are based on center-of-glass values and are obtained from your glass supplier.

[d.] Overall SHGC values are based on the standard NFRC specimen size of 1,500 mm wide by 600 mm high (59-1/6" by 23-5/8").

Laws and building and safety codes governing the design and use of Kawneer products vary widely. Kawneer does not control the selection of its products and assumes no responsibility therefor. See full disclaimer at end of document.
© 2020, Kawneer Company, Inc.

System Visible Transmittance (VT) - CW (Shallow) - Project-Out Window with 1-3/4" Glazing

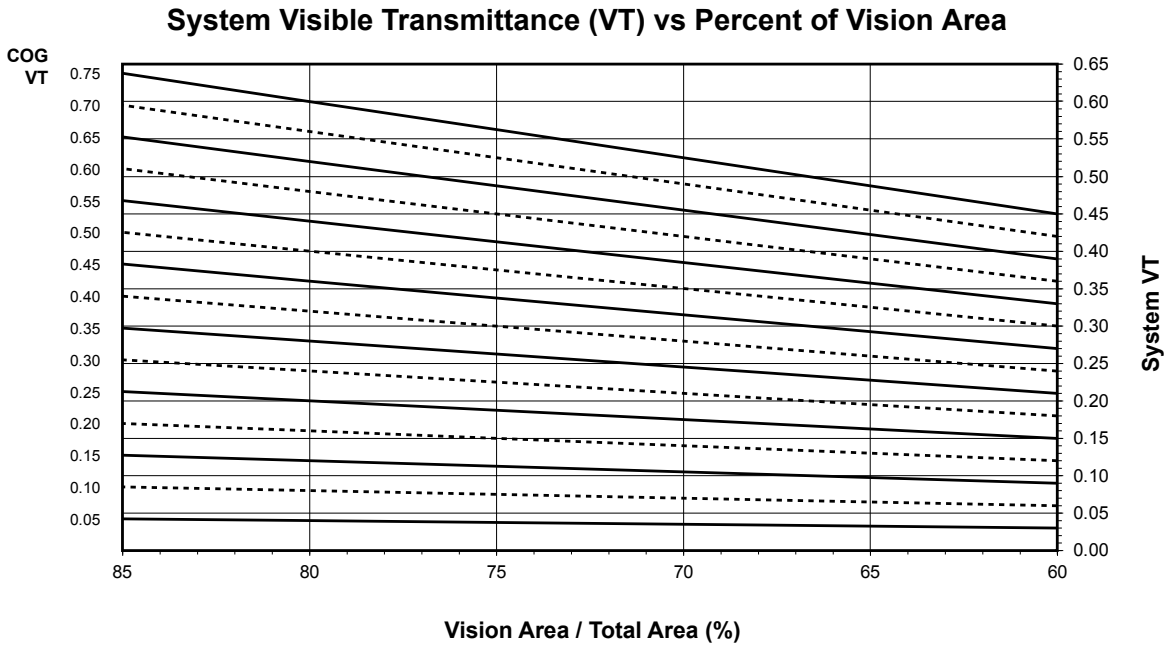

See Note, page 61.

Visible Transmittance (VT)

Glass VT [a. b. c.]	Overall VT [d.]
0.75	0.56
0.70	0.52
0.65	0.49
0.60	0.45
0.55	0.41
0.50	0.37
0.45	0.34
0.40	0.30
0.35	0.26
0.30	0.22
0.25	0.19
0.20	0.15
0.15	0.11
0.10	0.07
0.05	0.04

[a.] VT values are determined in accordance with NFRC 200.

[b.] For glass values that are not listed, linear interpolation is permitted.

[c.] Glass properties are based on center-of-glass values and are obtained from your glass supplier.

[d.] Overall VT values are based on the standard NFRC specimen size of 1,500 mm wide by 600 mm high (59-1/6" by 23-5/8").

Laws and building and safety codes governing the design and use of Kawneer products vary widely. Kawneer does not control the selection of its products and assumes no responsibility therefor. See full disclaimer at end of document.
© 2020, Kawneer Company, Inc.

May, 2026
97911-351
ADME077EN

CW (Shallow) - Outswing Casement Window with 1" Glazing (Aluminum Glazing Spacer)

NOTE

These notes apply to the charts for system U-factor, solar heat gain coefficient (SHGC), and visible transmittance (VT):

- Values in parentheses are metric.
- COG = Center of Glass
- Charts are generated per AAMA 507.
- For glass values that are not listed, linear interpolation is permitted.
- Glass properties are based on center-of-glass values and are obtained from your glass supplier.

System U-factor for Glass Area

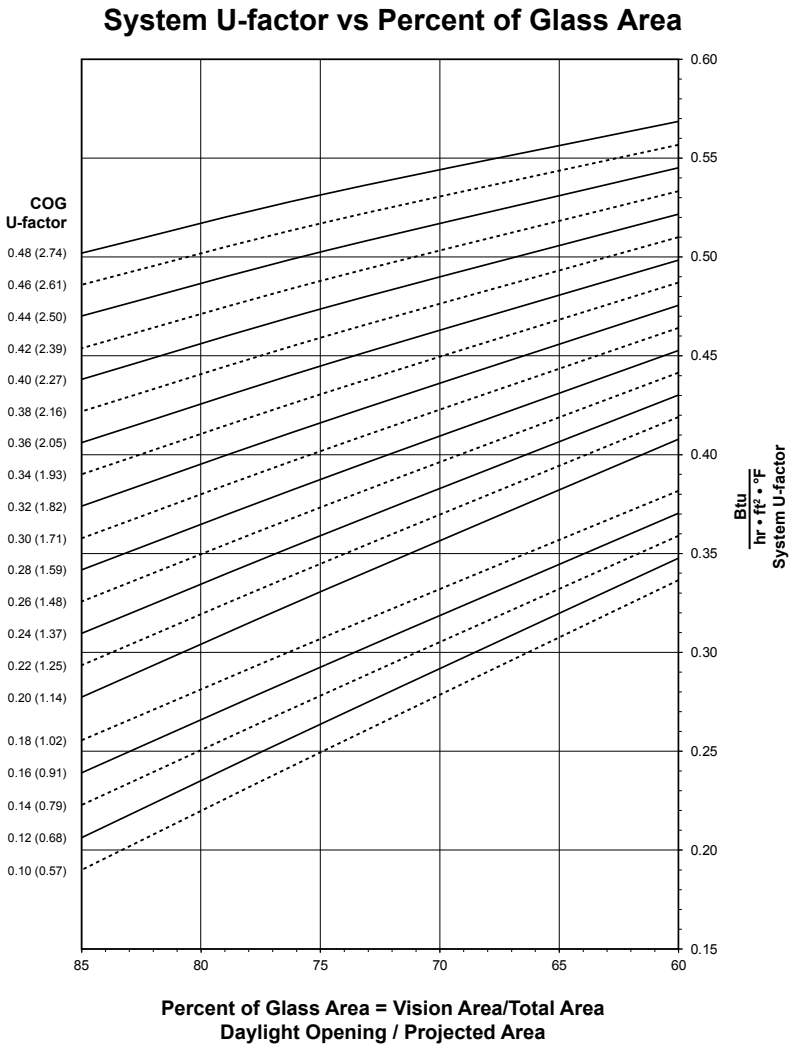

See Note, page 65.

Laws and building and safety codes governing the design and use of Kawneer products vary widely. Kawneer does not control the selection of its products and assumes no responsibility therefor. See full disclaimer at end of document.
© 2020, Kawneer Company, Inc.

CW (Shallow) - Outswing Casement Window with 1" Glazing

Thermal Transmittance (BTU/hr • ft^2 • °F)

Glass U-factor [a. b. c.]	Overall U-factor [d.]
0.48	0.53
0.46	0.52
0.44	0.50
0.42	0.49
0.40	0.47
0.38	0.46
0.36	0.45
0.34	0.43
0.32	0.42
0.30	0.40
0.28	0.39
0.26	0.37
0.24	0.36
0.22	0.35
0.20	0.33
0.18	0.31
0.16	0.29
0.14	0.28
0.12	0.27
0.10	0.25

[a.] U-factor values are determined in accordance with NFRC 100.

[b.] For glass values that are not listed, linear interpolation is permitted.

[c.] Glass properties are based on center-of-glass values and are obtained from your glass supplier.

[d.] Overall U-factor values are based on the standard NFRC specimen size of 1,500 mm wide by 600 mm high (59-1/6" by 23-5/8").

Laws and building and safety codes governing the design and use of Kawneer products vary widely. Kawneer does not control the selection of its products and assumes no responsibility therefor. See full disclaimer at end of document.
© 2020, Kawneer Company, Inc.

System Solar Heat Gain Coefficient (SHGC) - CW (Shallow) - Outswing Casement Window with 1" Glazing

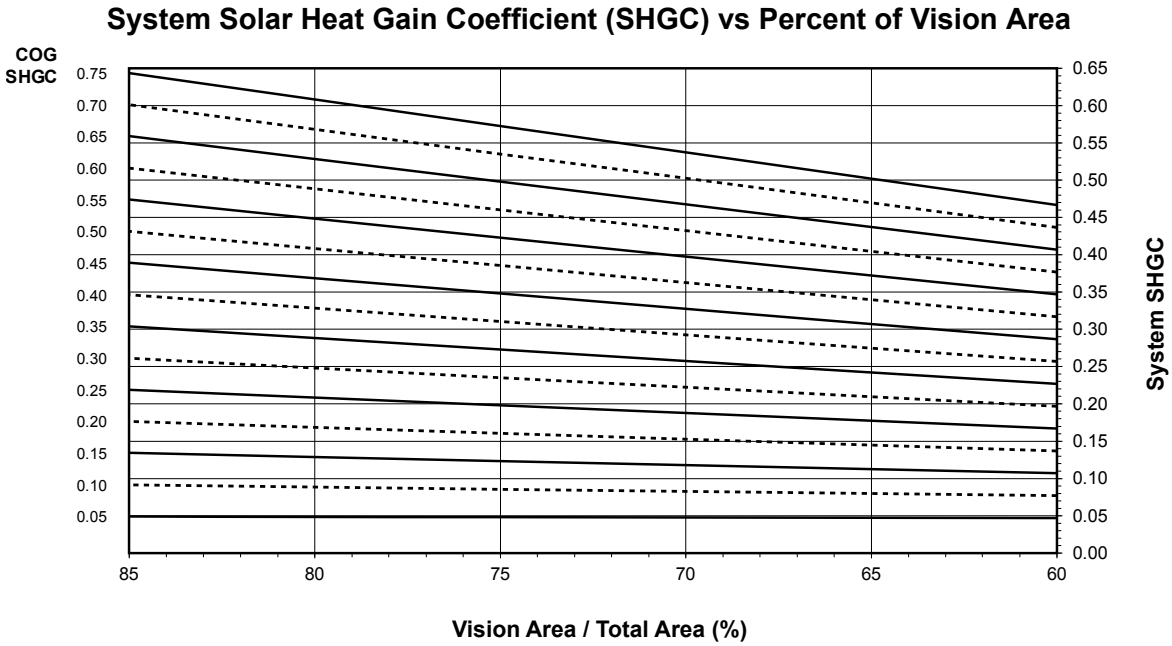

See Note, page 65.

Solar Heat Gain Coefficient (SHGC) Matrix

Glass SHGC [a.] [b.] [c.]	Overall SHGC [d.]
0.75	0.57
0.70	0.53
0.65	0.50
0.60	0.46
0.55	0.42
0.50	0.38
0.45	0.35
0.40	0.31
0.35	0.27
0.30	0.23
0.25	0.20
0.20	0.16
0.15	0.12
0.10	0.09
0.05	0.05

[a.] SHGC values are determined in accordance with NFRC 200.

[b.] For glass values that are not listed, linear interpolation is permitted.

[c.] Glass properties are based on center-of-glass values and are obtained from your glass supplier.

[d.] Overall SHGC values are based on the standard NFRC specimen size of 1,500 mm wide by 600 mm high (59-1/6" by 23-5/8").

Laws and building and safety codes governing the design and use of Kawneer products vary widely. Kawneer does not control the selection of its products and assumes no responsibility therefor. See full disclaimer at end of document.
© 2020, Kawneer Company, Inc.

System Visible Transmittance (VT) - CW (Shallow) - Outswing Casement Window with 1" Glazing

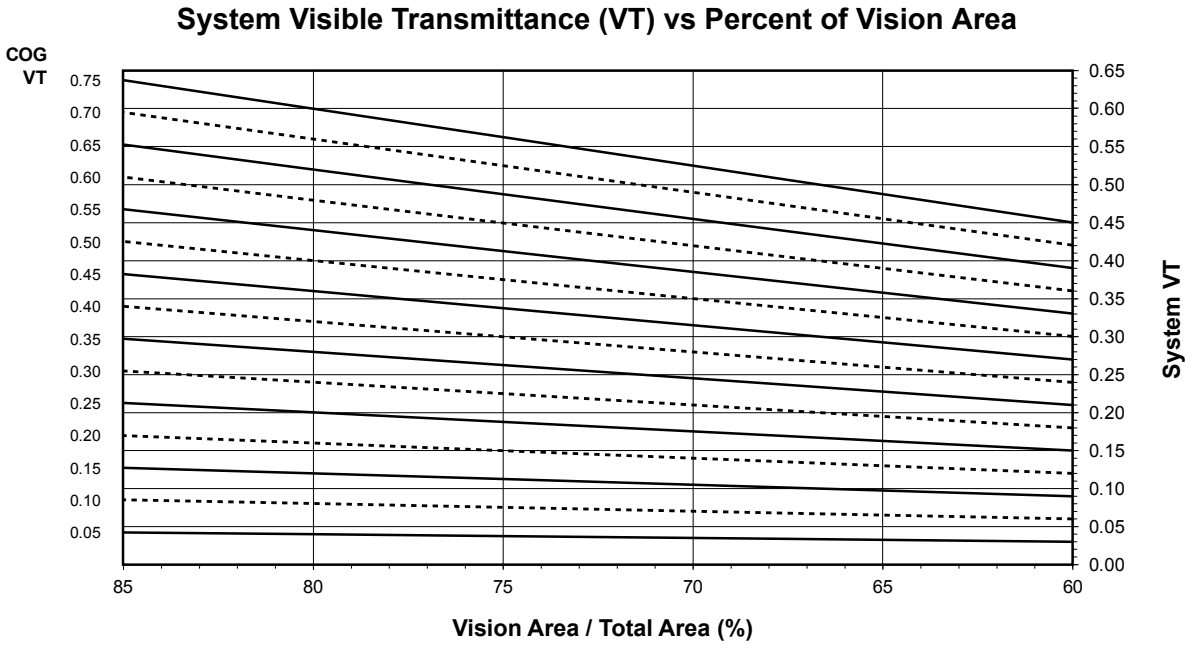

See Note, page 65.

Visible Transmittance (VT)

Glass VT [a. b. c.]	Overall VT [d.]
0.75	0.56
0.70	0.52
0.65	0.49
0.60	0.45
0.55	0.41
0.50	0.37
0.45	0.34
0.40	0.30
0.35	0.26
0.30	0.22
0.25	0.19
0.20	0.15
0.15	0.11
0.10	0.07
0.05	0.04

[a.] VT values are determined in accordance with NFRC 200.

[b.] For glass values that are not listed, linear interpolation is permitted.

[c.] Glass properties are based on center-of-glass values and are obtained from your glass supplier.

[d.] Overall VT values are based on the standard NFRC specimen size of 1,500 mm wide by 600 mm high (59-1/6" by 23-5/8").

Laws and building and safety codes governing the design and use of Kawneer products vary widely. Kawneer does not control the selection of its products and assumes no responsibility therefor. See full disclaimer at end of document.
© 2020, Kawneer Company, Inc.

May, 2026
97911-351
ADME077EN

CW (Shallow) - Outswing Casement Window with 1-3/4" Glazing (Aluminum Glazing Spacer)

NOTE

These notes apply to the charts for system U-factor, solar heat gain coefficient (SHGC), and visible transmittance (VT):

- Values in parentheses are metric.
- COG = Center of Glass
- Charts are generated per AAMA 507.
- For glass values that are not listed, linear interpolation is permitted.
- Glass properties are based on center-of-glass values and are obtained from your glass supplier.

System U-factor for Glass Area

System U-factor vs Percent of Glass Area

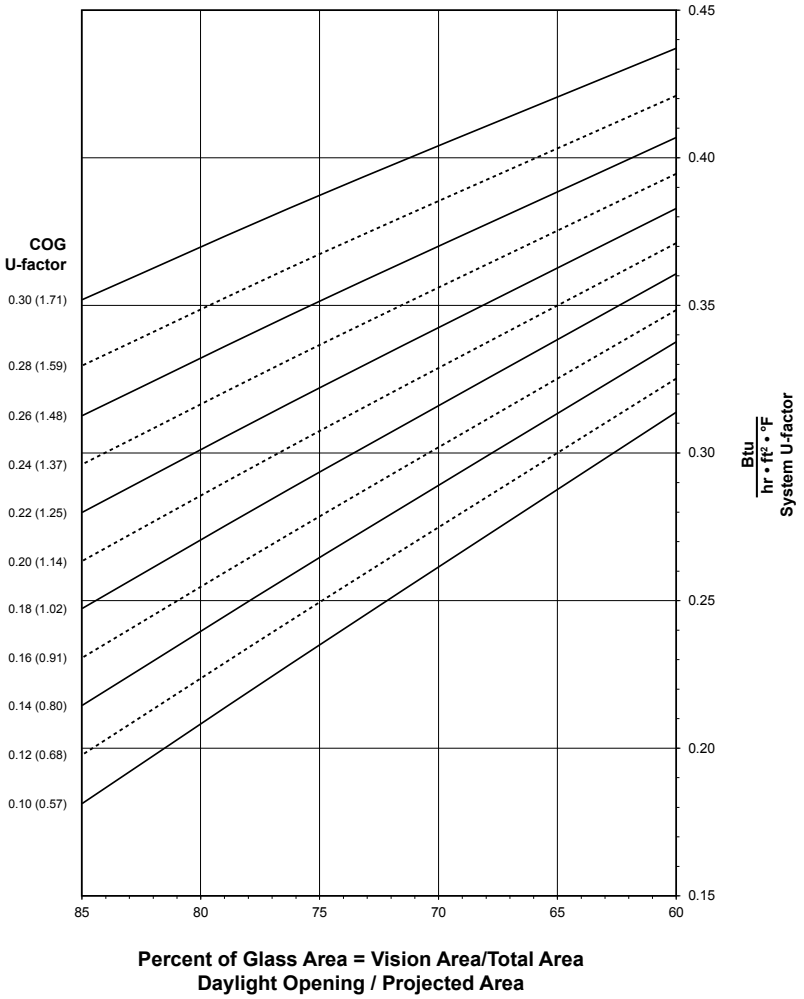

See Note, page 69.

Laws and building and safety codes governing the design and use of Kawneer products vary widely. Kawneer does not control the selection of its products and assumes no responsibility therefor. See full disclaimer at end of document.
© 2020, Kawneer Company, Inc.

CW (Shallow) - Outswing Casement Window with 1-3/4" Glazing

Thermal Transmittance (BTU/hr • ft^2 • °F)

Glass U-factor [a. b. c.]	Overall U-factor [d.]
0.31	0.39
0.28	0.37
0.26	0.35
0.24	0.34
0.22	0.32
0.20	0.31
0.18	0.29
0.16	0.28
0.14	0.27
0.12	0.25
0.10	0.24

[a.] U-factor values are determined in accordance with NFRC 100.

[b.] For glass values that are not listed, linear interpolation is permitted.

[c.] Glass properties are based on center-of-glass values and are obtained from your glass supplier.

[d.] Overall U-factor values are based on the standard NFRC specimen size of 1,500 mm wide by 600 mm high (59-1/6" by 23-5/8").

Laws and building and safety codes governing the design and use of Kawneer products vary widely. Kawneer does not control the selection of its products and assumes no responsibility therefor. See full disclaimer at end of document.
© 2020, Kawneer Company, Inc.

May, 2026
97911-351
ADME077EN

System Solar Heat Gain Coefficient (SHGC) - CW (Shallow) - Outswing Casement Window with 1-3/4" Glazing

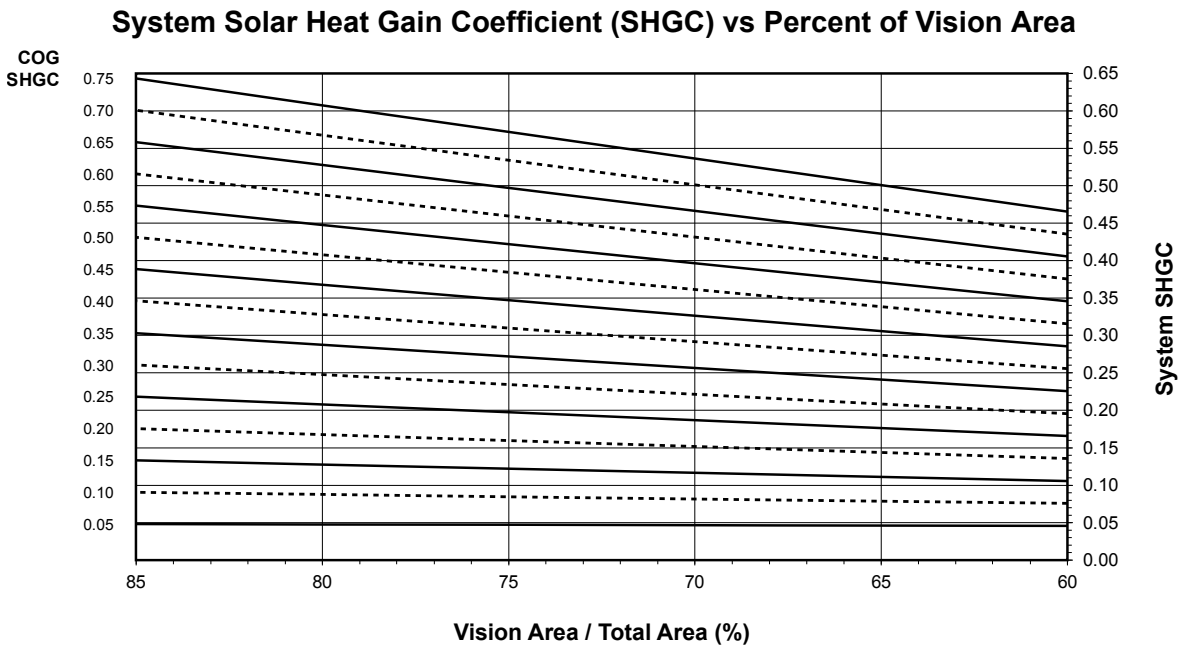

See Note, page 69.

Solar Heat Gain Coefficient (SHGC) Matrix

Glass SHGC [a.] [b.] [c.]	Overall SHGC [d.]
0.75	0.57
0.70	0.53
0.65	0.50
0.60	0.46
0.55	0.42
0.50	0.38
0.45	0.35
0.40	0.31
0.35	0.27
0.30	0.23
0.25	0.20
0.20	0.16
0.15	0.12
0.10	0.08
0.05	0.05

[a.] SHGC values are determined in accordance with NFRC 200.

[b.] For glass values that are not listed, linear interpolation is permitted.

[c.] Glass properties are based on center-of-glass values and are obtained from your glass supplier.

[d.] Overall SHGC values are based on the standard NFRC specimen size of 1,500 mm wide by 600 mm high (59-1/6" by 23-5/8").

Laws and building and safety codes governing the design and use of Kawneer products vary widely. Kawneer does not control the selection of its products and assumes no responsibility therefor. See full disclaimer at end of document.
© 2020, Kawneer Company, Inc.

System Visible Transmittance (VT) - CW (Shallow) - Outswing Casement Window with 1-3/4" Glazing

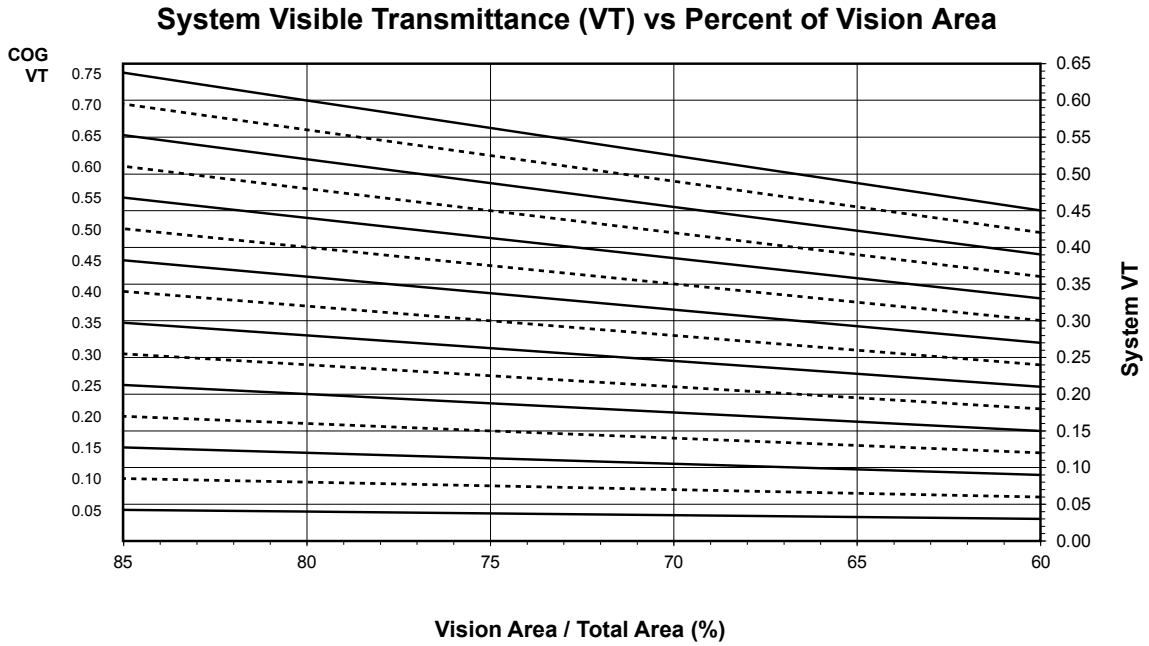

See Note, page 69.

Visible Transmittance (VT)

Glass VT [a. b. c.]	Overall VT [d.]
0.75	0.56
0.70	0.52
0.65	0.49
0.60	0.45
0.55	0.41
0.50	0.37
0.45	0.34
0.40	0.30
0.35	0.26
0.30	0.22
0.25	0.19
0.20	0.15
0.15	0.11
0.10	0.07
0.05	0.04

[a.] VT values are determined in accordance with NFRC 200.

[b.] For glass values that are not listed, linear interpolation is permitted.

[c.] Glass properties are based on center-of-glass values and are obtained from your glass supplier.

[d.] Overall VT values are based on the standard NFRC specimen size of 1,500 mm wide by 600 mm high (59-1/6" by 23-5/8").

Laws and building and safety codes governing the design and use of Kawneer products vary widely. Kawneer does not control the selection of its products and assumes no responsibility therefor. See full disclaimer at end of document.
© 2020, Kawneer Company, Inc.

Notes

Laws and building and safety codes governing the design and use of Kawneer products vary widely. Kawneer does not control the selection of its products and assumes no responsibility therefor. See full disclaimer at end of document.
© 2020, Kawneer Company, Inc.

Notes And Disclaimers

Laws and building and safety codes governing the design and use of Kawneer products, such as glazed entrance, window, and curtain wall products, vary widely. Kawneer does not control the selection of product configurations, operating hardware, or glazing materials, and assumes no responsibility therefor. It is the responsibility of the owner, the specifier, the architect, the general contractor, and the installer and the fabricator/transformer, consistent with their roles, to determine the appropriate materials for a project in strict conformity to all applicable national, regional and local building codes and regulations.

Kawneer reserves the right to change configuration without prior notice when deemed necessary for product improvement.

Information contained herein or related hereto is intended only for evaluation by technically skilled persons, with any use thereof to be at their independent discretion and risk. Such information is believed to be reliable, but Kawneer shall have no responsibility or liability for results obtained or damages resulting from such use.

Kawneer grants no license under, and shall have no responsibility or liability for infringement of, any patent or other proprietary right. Nothing in this document should be construed as a warranty or guarantee by Kawneer, and the only applicable warranties will be those set forth in Kawneer acknowledgment or in any printed warranty documents issued by Kawneer. The foregoing may be waived or modified only in writing by a Kawneer officer.

© 2020, Kawneer Company, Inc.